Kawasaki

MICRO-K

PARTS CATALOG

Year & Model	**'07 KX250T7F**
Color	1. Lime Green (777)
VIN No. Range	JKAKX250TTA011001 ~
	JKAKXMTC√7A011001 ~ (Australia only)
Engine No. Range	KX250TE000001 ~

'07 KX250 T7F

(KX250F)

Publications A-2
Model Identification A-4
Engine B-1
Chassis E-1

© Kawasaki Heavy Industries, Ltd. 2006

Engine No. Location:
RH side crankcase

Year & Model	Owner’s Manual	A&P Manual		Service Manual		Microfiche
		General	Supplement	Basic	Supplement	
2007 KX250T7F	99976-1311 99986-1362(Australia only)	99939-1314-02		99924-1354-02		99912-1462-01

PARTS LIST INFORMATION

This parts catalog lists parts and sub-assemblies provided as spare parts.
When it becomes necessary to replace parts always use KAWASAKI GENUINE PARTS. Strict inspection assures quality and performance of KAWASAKI GENUINE PARTS.

1. HOW TO ODER PARTS

When ordering parts be sure to use the catalog for the correct model and year of the vehicle. Include the following items exactly as listed in this catalog on your parts order.

Part Number
Part Name
Color Code
Specify the color using both color code (which is part of the part number) and name when ordering painted parts.

Example: 51001-5074-H8 TANK-COMP-FUEL,EBONY

Parts not shown disassembled in the illustrations of this parts catalog are not sold separately; only the complete units or next higher assemblies illustrated, are supplied, as spare parts.

2. EXPLANATION OF PARTS CATALOG FORMAT

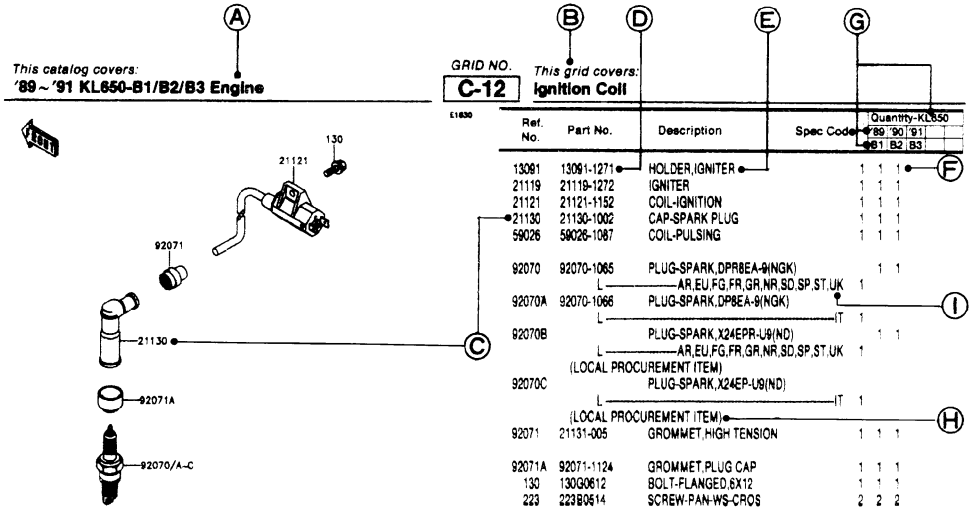

A. Year & Model Title
This title describes the year(s) and model(s) contained in this catalog.

B. Part Group Title
A representative name for the group of parts illustrated on this page.

C. Referernce Number
The reference number is listed on the illustration and parts list. It is the link between the illustration and the parts list.

D. Part Number
The number assigned to a part for the purpose of parts ordering.

1) Part Number (New Structure)
00000 – 0000 – 00 or 00000 – 0000 – 000 (Old Structure) 00000 – 000 – 00

- Color Code
- Production Number
- Function Code

2) Standard Hardware Number
000 0 0000

- Size Number
- Material or Surface Treatment Code (Alphabet)
- Item Number

E. Description
Describes the main function of the part and includes data such as size, number of teeth, color,etc.

List of Abbreviations

(+)	Plus	HEX	Hexagonal	REF	Reference
(-)	Minus	ID =	Inside Diameter	RH	Right Hand
&	And	KPH	Killometers Per Hour	RPM	Revolutions Per Minute
2ND	Second	L	Link	RR	Rear
3RD	Third	L =	Length	STD	Standard
4TH	Fourth	L/	Less	T	Teeth
AR	As Required	LH	Left Hand	T =	Thickness
ASSY	Assembly	LWR	Lower	U/S	Under Size
CA	Cut Away	MM	Millimeter	UPP	Upper
CNT	Center	MPH	Miles Per Hour	V	Volt
COMP	Complete	NA	Not Available	W	Watt
D	Degree	O/S	Over Size	W/	With
FR	Front	OD =	Outside Diameter	WD	With Decal
G	Gram	PR	Ply Rating	WOD	Without Decal

F. Quantity
Specifies how many of a part are required at the indicated position on the illustration.

G. Year & Model
Indicates which parts are used for a specific vehicle year and model.

H. Additional Information
Additional Information is shown as follows:
1) (OPTION) Part is not installed as original equipment, but is available separately.
2) (RACING USE ONLY) Part is to be used for closed course racing only on this vehicle.
3) (OFF-ROAD USE ONLY) Part is for off-road use only this vehicle.
4) (LOCAL PROCUREMENT ITEM) Part is obtainable from a local source. No part number is listed.
5) Technical relationships between old part numbers and new part numbers are shown as follows:
INTERCHANGE - Old part or new part can be used.
SUBSTITUTE - New part replaces old part. Old part cannot be used in place of new part.
6) Mid-Year part number changes on a vehicle are noted by engine or frame number references.

(- KZ400DE001181)	Affected units are from beginning of model year production up to and including this engine number.
(KZ400D-008111 -)	Affected units are from this frame number to the end of model year production.
(KZ400DE008181 - KZ400DE018888)	Affected units are in this engine number range.

I. Specification Code
Identifies the specification of the vehicle for which the part applies. If no spec code is listed, that means the part is used for all specifications.

Spec Code	Specification	'07				
		T7F				
AS	Australia	O				
EU	Europe(General)	O				

KX250T7F

Left Side View

Right Side View

’07 KX250T7F

O : Applicable ×: Not applicable

Color: Lime Green (777) **(1)**

Part No.	Description	Spec.Code AS	EU											
11011-0055-6Z	CASE-AIR FILTER,F.BLACK	O	O											
14037-0058-RZ	SCREEN,RH,WHITE	O	O											
14037-0063-RZ	SCREEN,LH,WHITE	O	O											
14091-1523-RZ	COVER,REAR DISC,WHITE	O	O											
34024-1396-458	STAND-SIDE,P.SILVER	O	O											
35004-0078-290	FENDER-FRONT,L.GREEN	O	O											
35023-0100-290	FENDER-REAR,L.GREEN	O	O											
36001-0075-266	COVER-SIDE,LH,S.WHITE	O	O											
36001-0087-266	COVER-SIDE,RH,S.WHITE	O	O											
41034-0035-10Y	DRUM-ASSY,REAR BRAKE,M.M.GOLD	O	O											
41034-0037-10Y	DRUM-ASSY,FRONT BRAKE,M.M.GOLD	O	O											
41090-0033-10Y	WHEEL,RR,1.85X19,AL NIPPLE,GLD	O	O											
41090-0035-10Y	WHEEL,FR,1.60X21,AL NIPPLE,GLD	O	O											
43089-0012-829	CYLINDER-SHOCKABSORBER,GOLD	O	O											
44008-0029-828	PIPE-FORK OUTER,GOLD	O	O											
44037-0034-10Y	HOLDER-FORK UNDER,M.M.GOLD	O	O											
44039-0036-10Y	HOLDER-FORK UPPER,M.M.GOLD	O	O											
46012-0013-10Y	HOLDER-HANDLE,LWR,M.M.GOLD	O	O											
46012-0020-10Y	HOLDER-HANDLE,UPP,FAT BAR,GOLD	O	O											
46012-0021-10Y	HOLDER-HANDLE,LWR,FAT BAR,GOLD	O	O											
46012-0023-10Y	HOLDER-HANDLE,UPP,M.M.GOLD	O	O											
51001-0110-6Z	TANK-COMP-FUEL,F.BLACK	O	O											
53066-0131-336	SEAT-ASSY,GREEN/BLACK	O	O											
55020-0172-RZ	GUARD,FORK,LH,WHITE	O	O											
55020-0334-RZ	GUARD,FORK,RH,WHITE	O	O											
58029-0003-266	PLATE-NUMBER,S.WHITE	O	O											
92145-0463-8V	SPRING,REAR SHOCK,K=51N/MM,SIL	O	O											
92145-0464-8V	SPRING,REAR SHOCK,K=47N/MM,SIL	O	O											
92145-0465-8V	SPRING,REAR SHOCK,K=49N/MM,SIL	O	O											
92145-0466-8V	SPRING,REAR SHOCK,K=53N/MM,SIL	O	O											

’07 KX250T7F

O : Applicable × : Not applicable

Color: Lime Green (777) **(2)**

Part No.	Description	Spec.Code AS	EU											
92153-1701-10J	BOLT,FORK,GOLD	O	×											
92153-1780-10J	BOLT,FORK,GOLD	×	O											

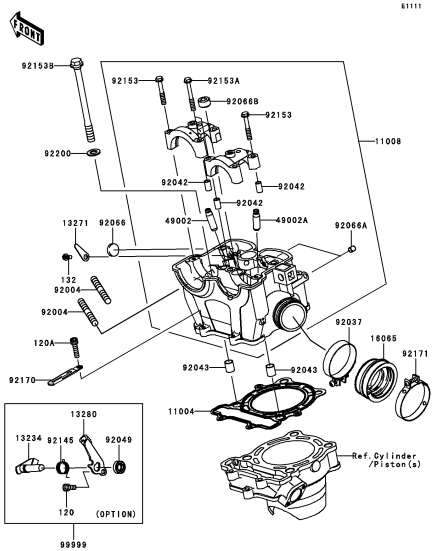

B-3 **Cylinder Head**

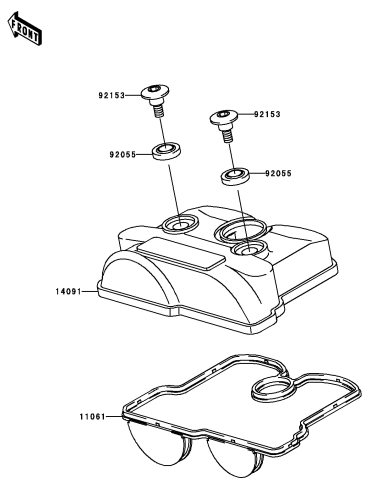

B-4 **Cylinder Head Cover**

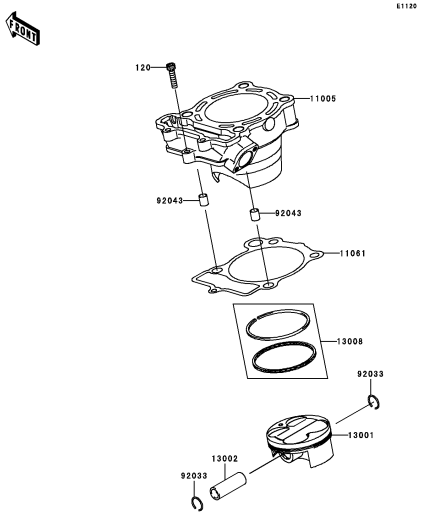

B-5 **Cylinder/Piston(s)**

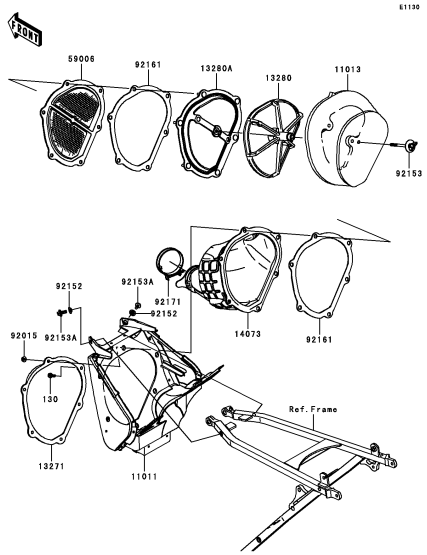

B-6 **Air Cleaner**

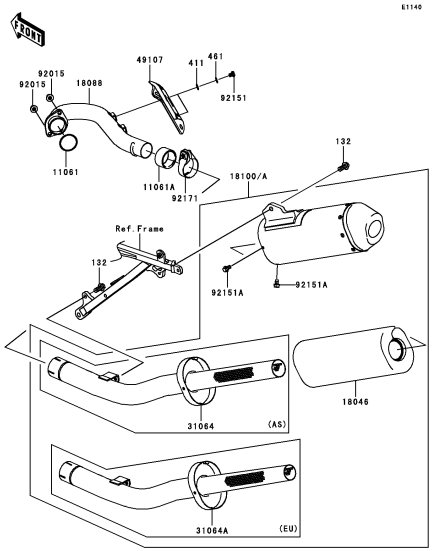

B-7 **Muffler(s)**

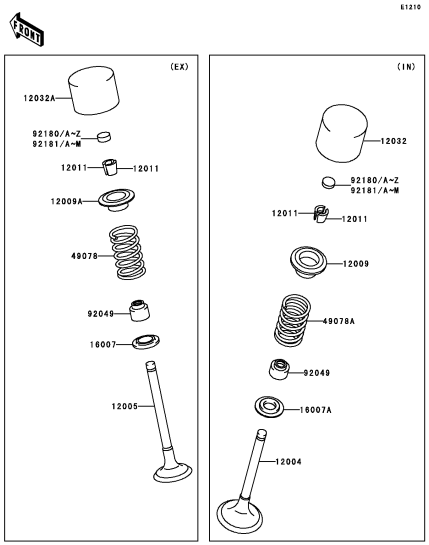

B-8 **Valve(s)(1/2)**

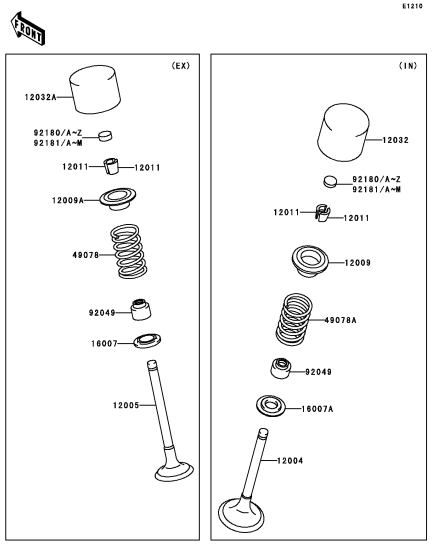

B-9 Valve(s)(2/2)

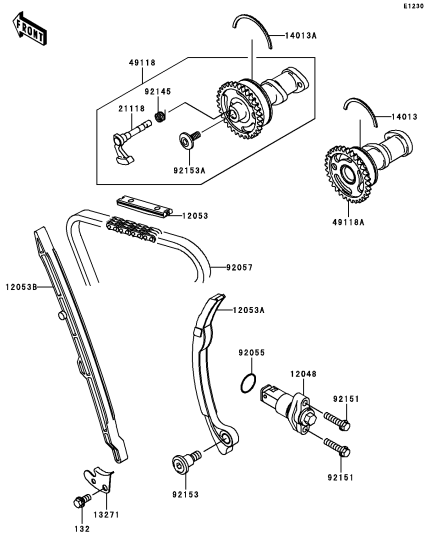

B-10 Camshaft(s)/Tensioner

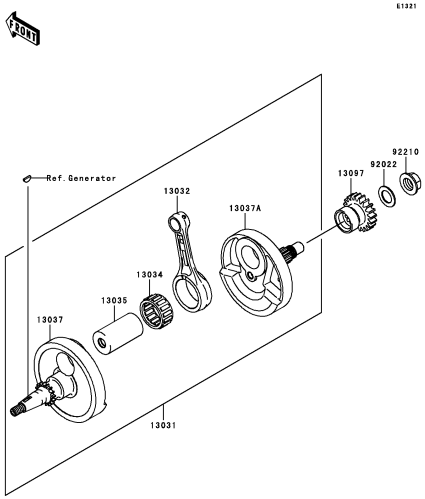

B-11 Crankshaft

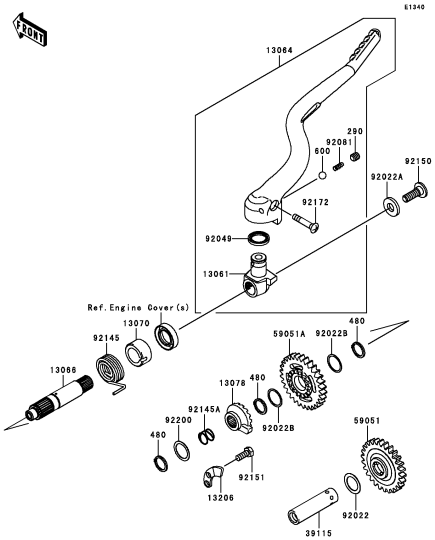

B-12 Kickstarter Mechanism

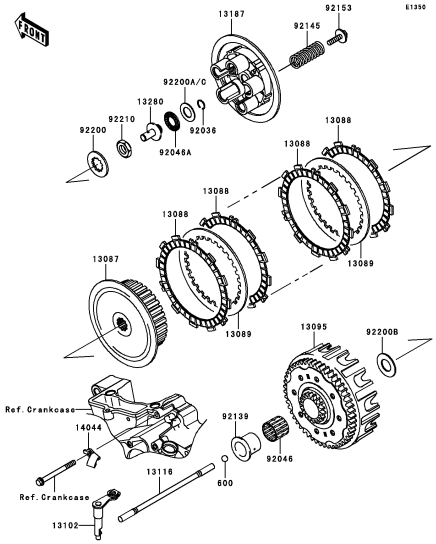

B-13 Clutch

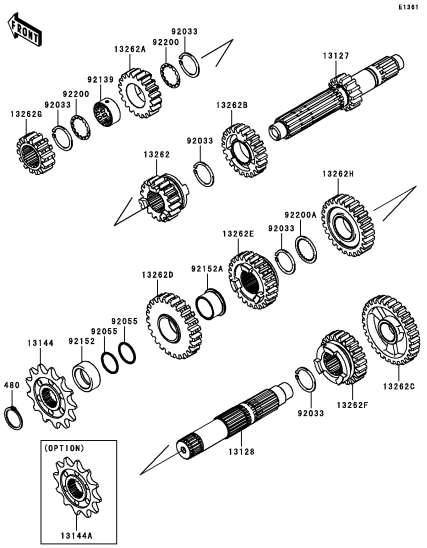

B-14 Transmission

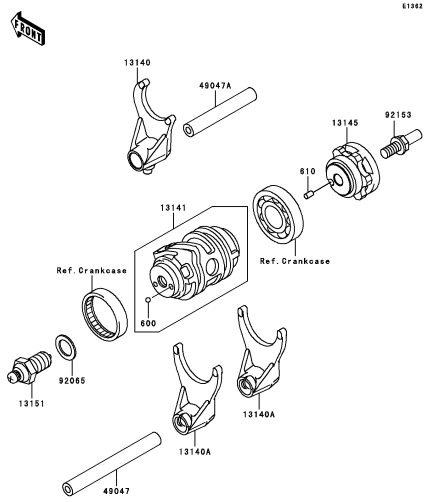

C-3 **Gear Change Drum/Shift Fork(s)**

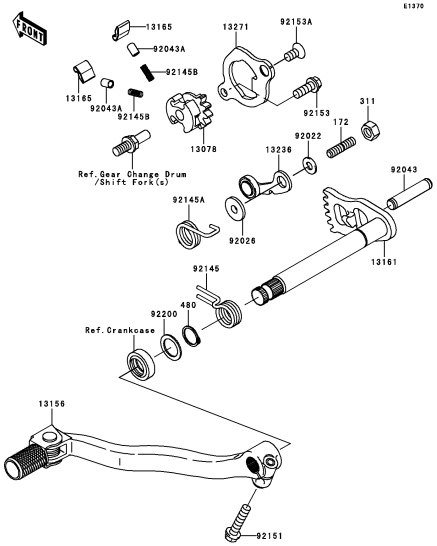

C-4 **Gear Change Mechanism**

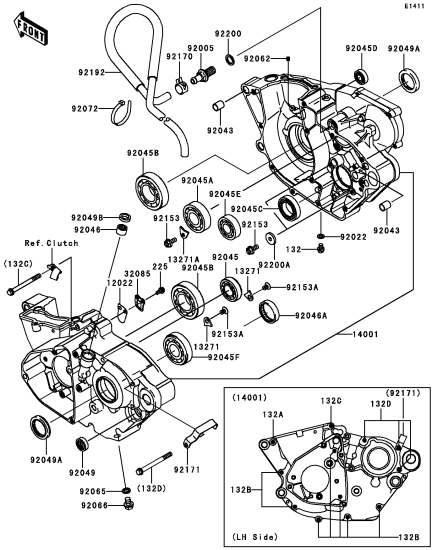

C-5 **Crankcase**

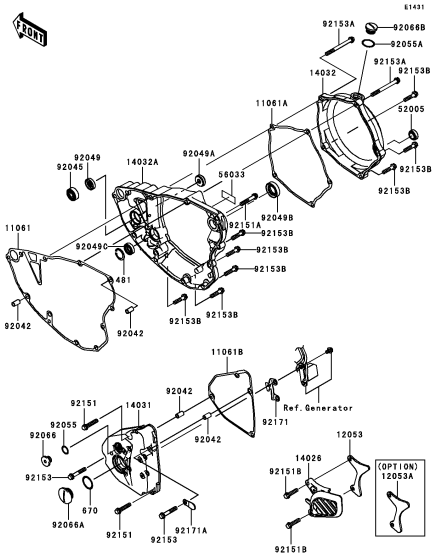

C-6 **Engine Cover(s)**

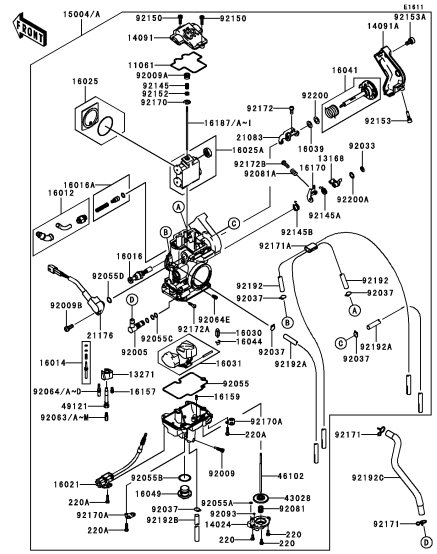

C-7 **Carburetor(1/4)**

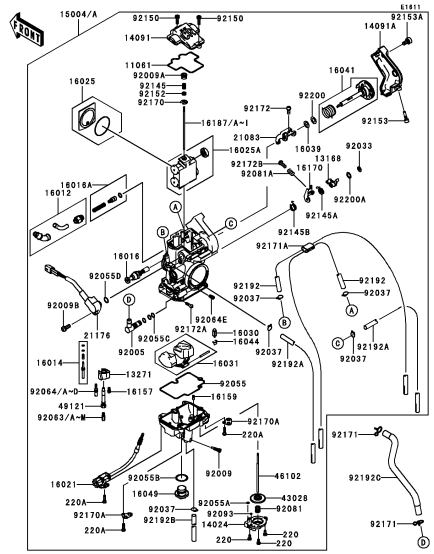

C-8 **Carburetor(2/4)**

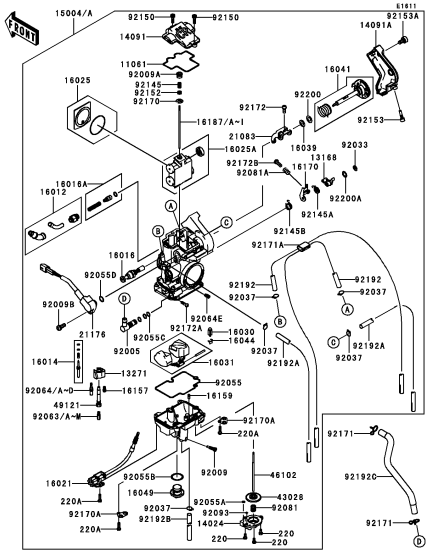

C-9 **Carburetor(3/4)**

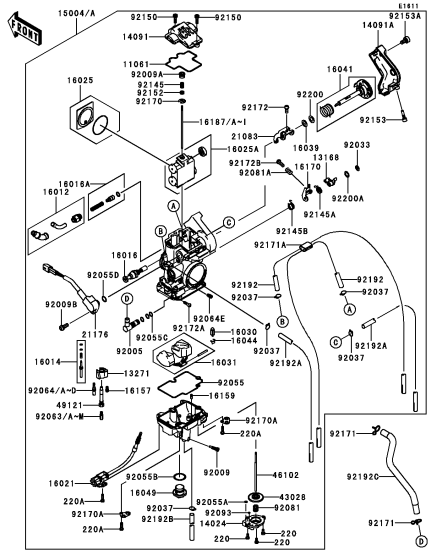

C-10 **Carburetor(4/4)**

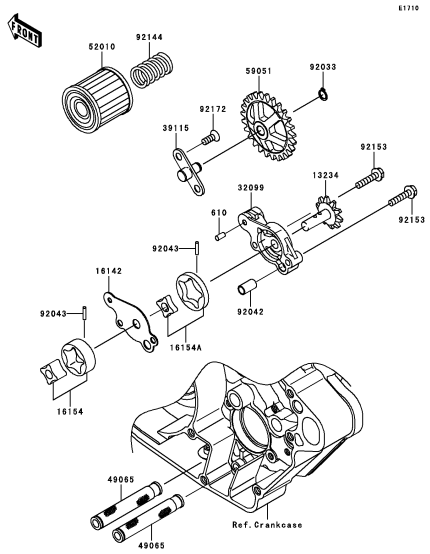

C-11 **Oil Pump**

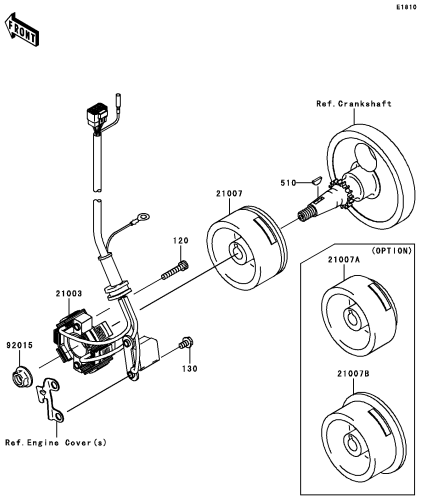

C-12 **Generator**

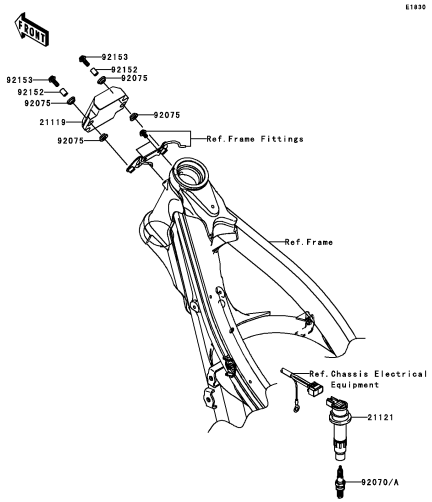

C-13 **Ignition System**

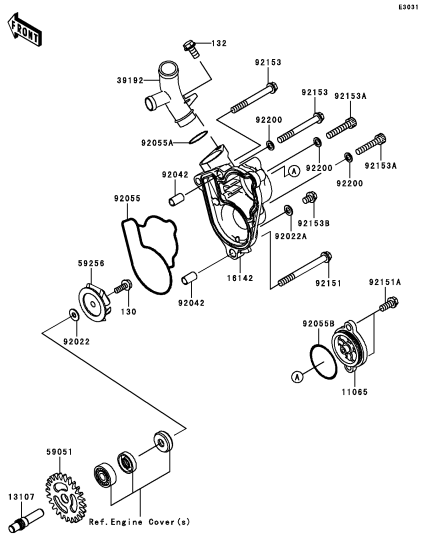

C-14 **Water Pump**

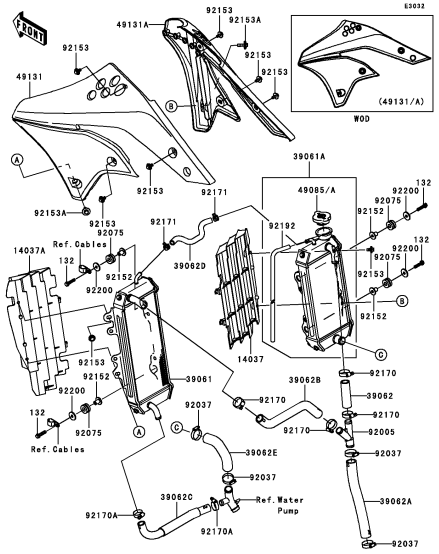
FRONT
E3032
49131A
92153
92153A
92153
92153
92153
49131
(49131/A)
WOD
39061A
49085/A
92153
92171
92200
132
92075
92152
92153A
92153
92075
92171
92192
92152
92200
132
92075
92153
Ref. Cables
14037A
132
92152
39062D
92200
92152
92153
14037
92152
92200
39061
39062B
92170
132
92075
92037
92170
39062
92170
92170
92005
Ref. Cables
39062E
92037
92037
39062C
Ref. Water Pump
39062A
92170A
92170A
92037

D-3 **Radiator**

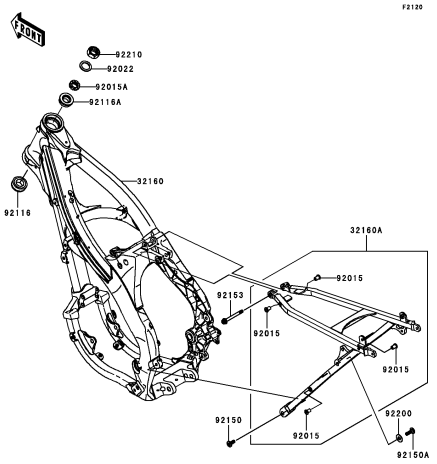

E-3 **Frame**

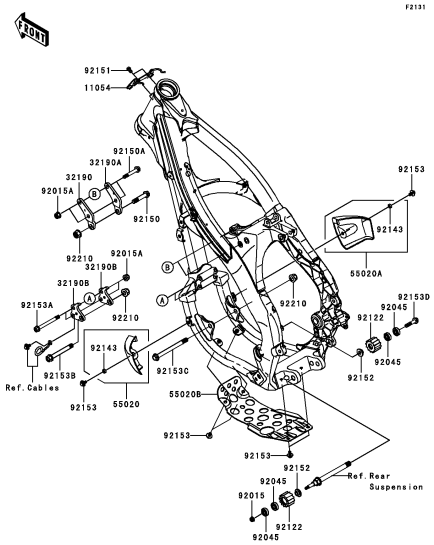

E-4 **Frame Fittings**

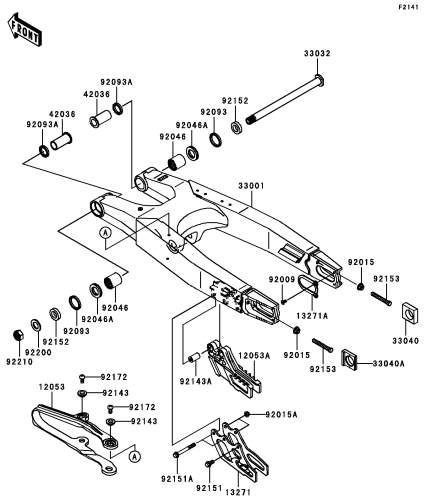

E-5 **Swingarm**

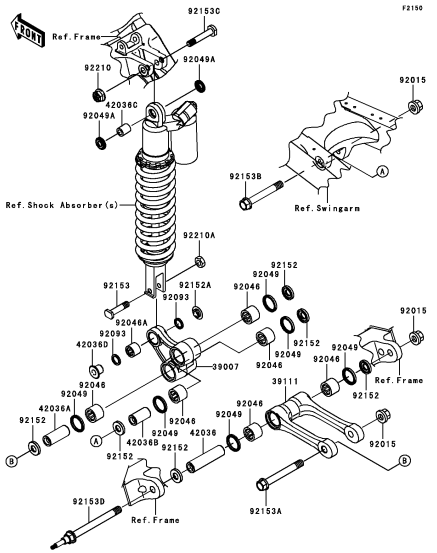

E-6 **Suspension**

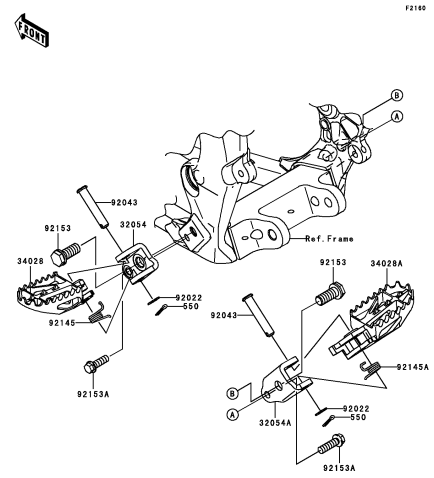

E-7 **Footrests**

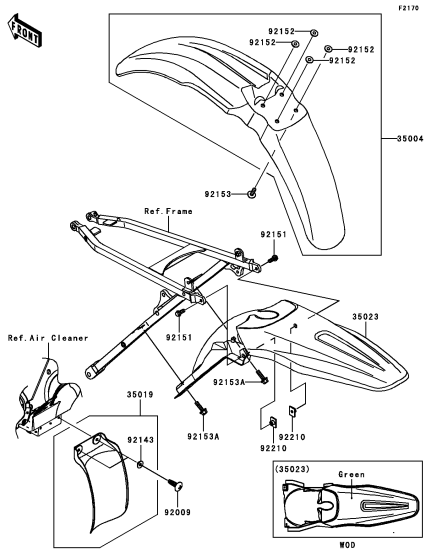

E-8 **Fenders**

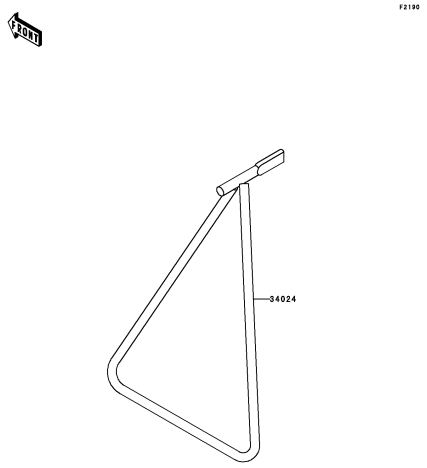

E-9 **Stand(s)**

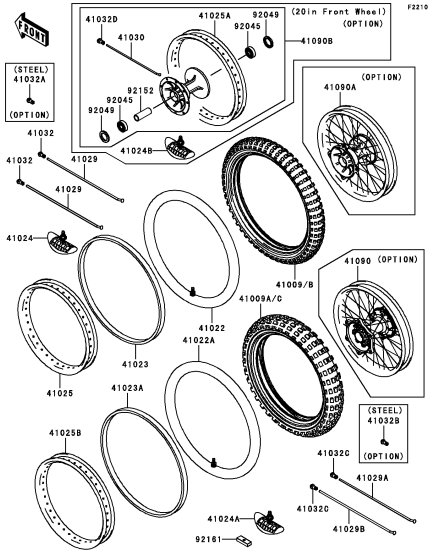

E-10 **Tires**

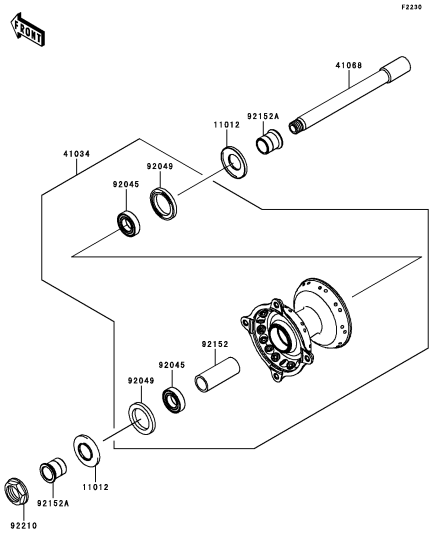

E-11 **Front Hub**

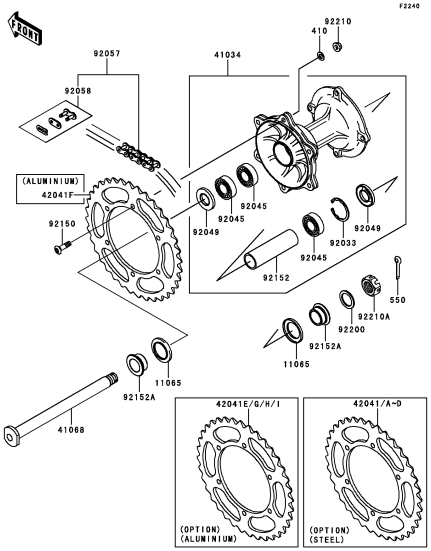

E-12 **Rear Hub**

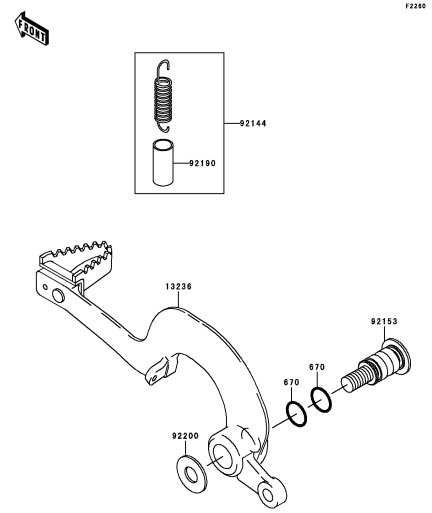

E-13 **Brake Pedal**

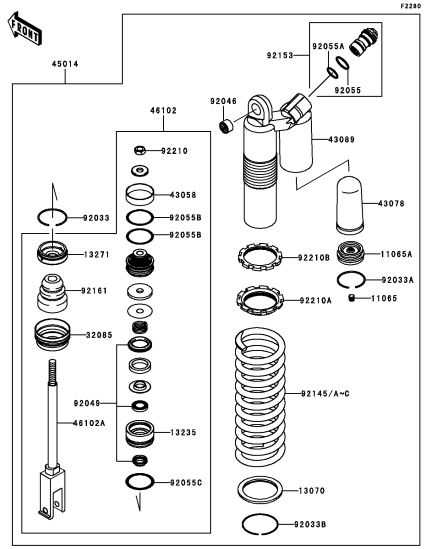

E-14 **Shock Absorber(s)**

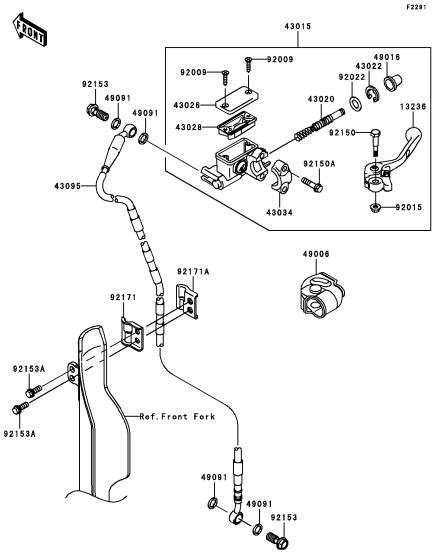

F-3 **Front Master Cylinder**

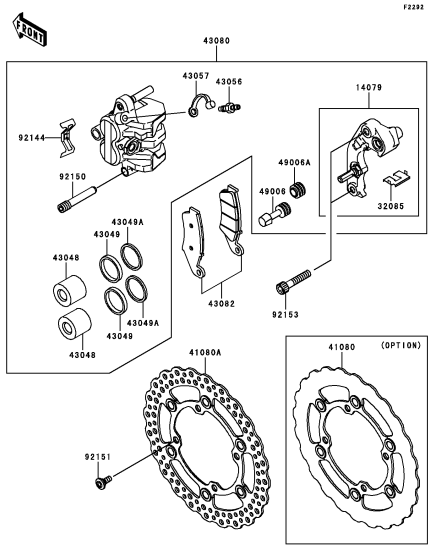

F-4 **Front Brake**

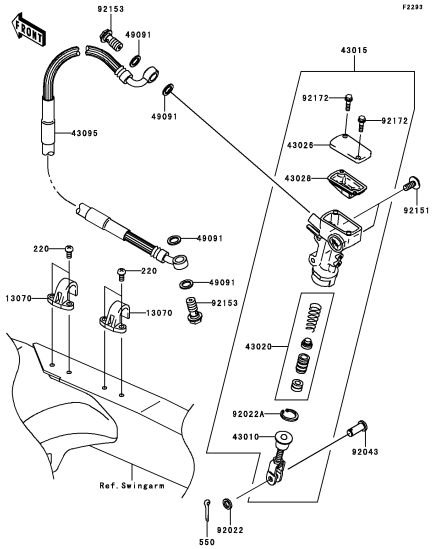

F-5 **Rear Master Cylinder**

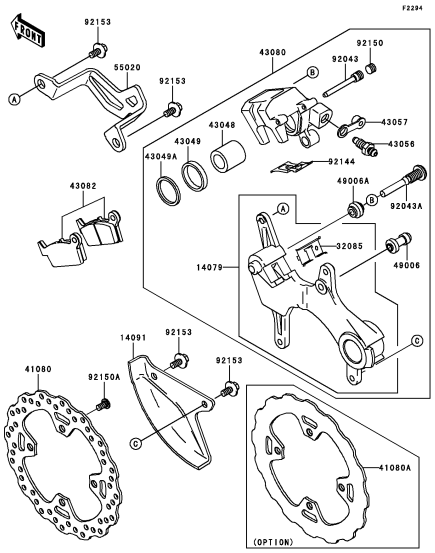

F-6 **Rear Brake**

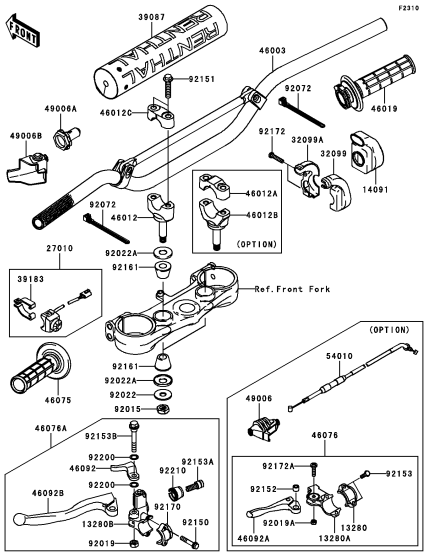

F-7 **Handlebar(1/2)**

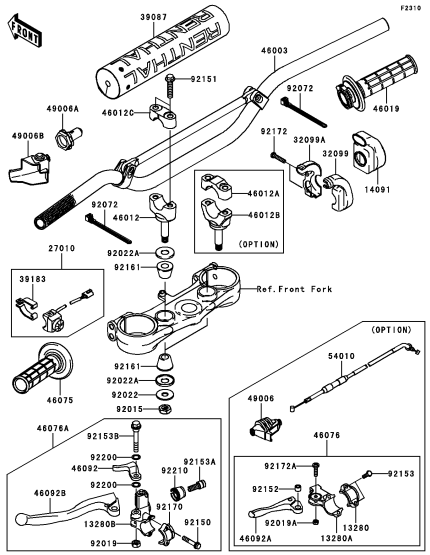

F-8 **Handlebar(2/2)**

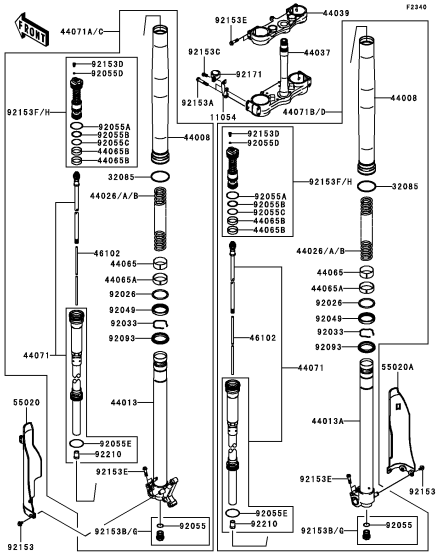

F-9 **Front Fork(1/2)**

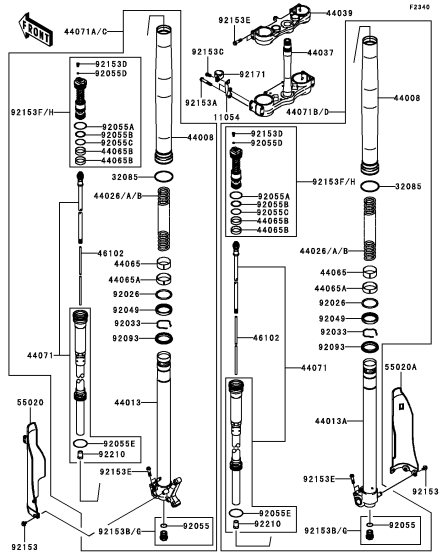

F-10 **Front Fork(2/2)**

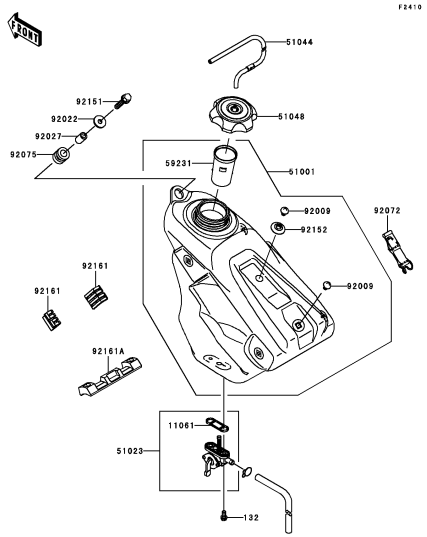

F-11 **Fuel Tank**

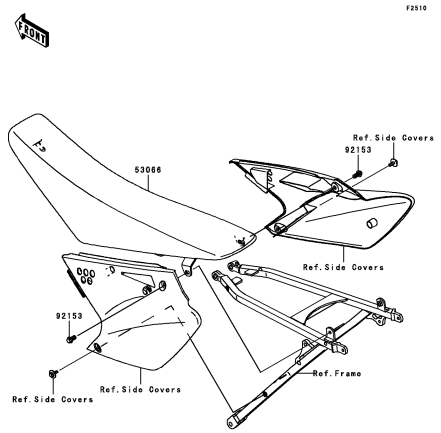

F-12 **Seat**

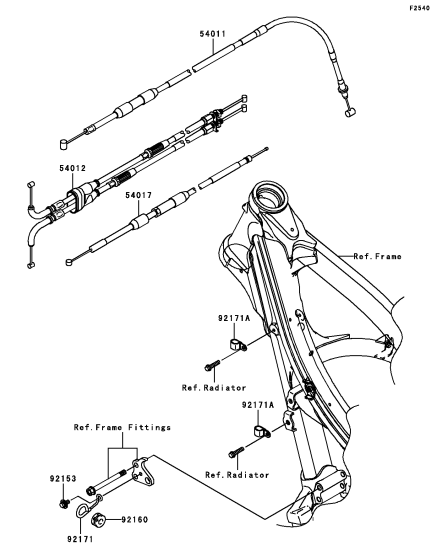

F-13 **Cables**

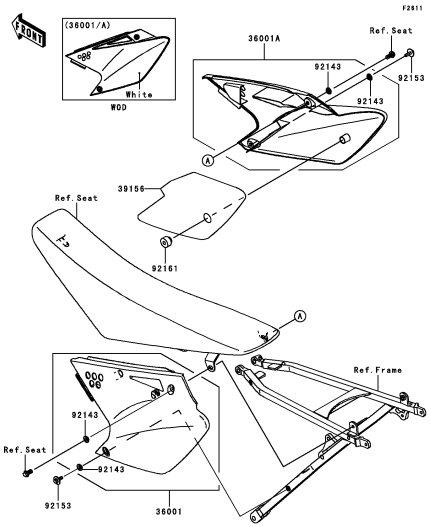

F-14 **Side Covers**

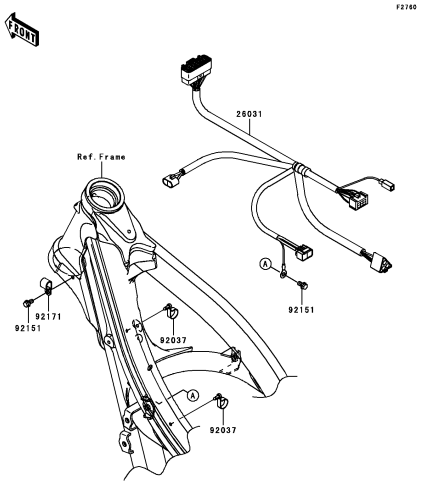

G-3 **Chassis Electrical Equipment**

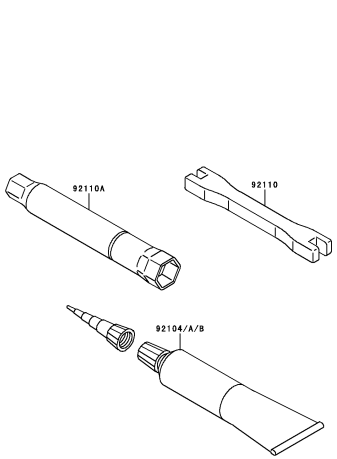

G-4 **Owner’s Tools**

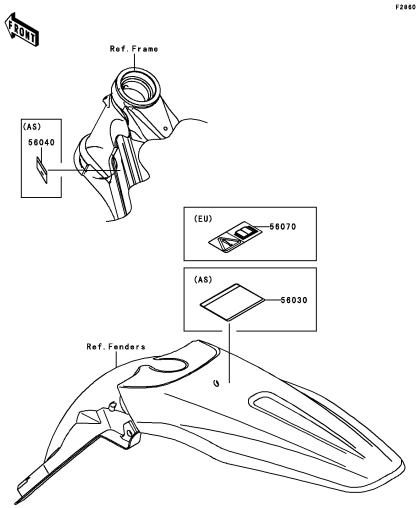

G-5 **Labels**

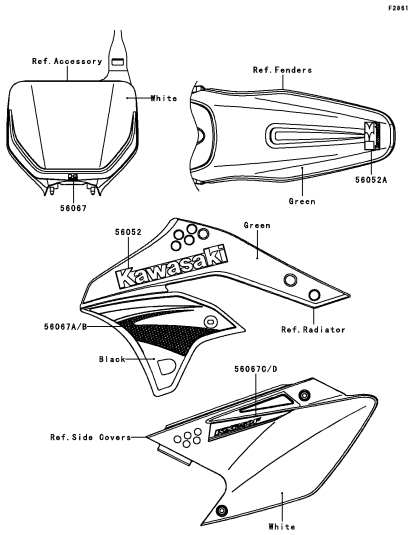

G-6 **Decals**

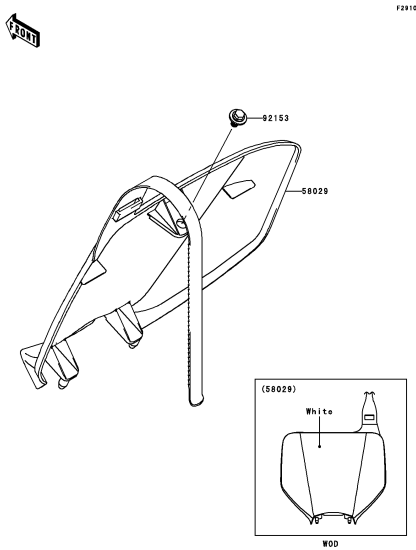

G-7 **Accessory**

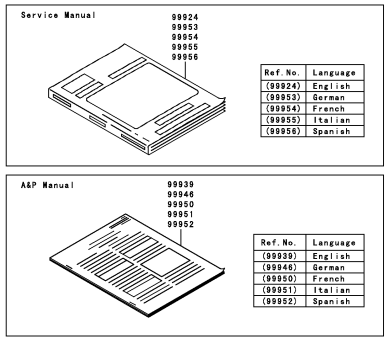

G-8 **Manual(EU)**

This catalog covers:

'07 KX250T7F Engine

GRID NO. **B-3**

This grid covers:

Cylinder Head

E1111

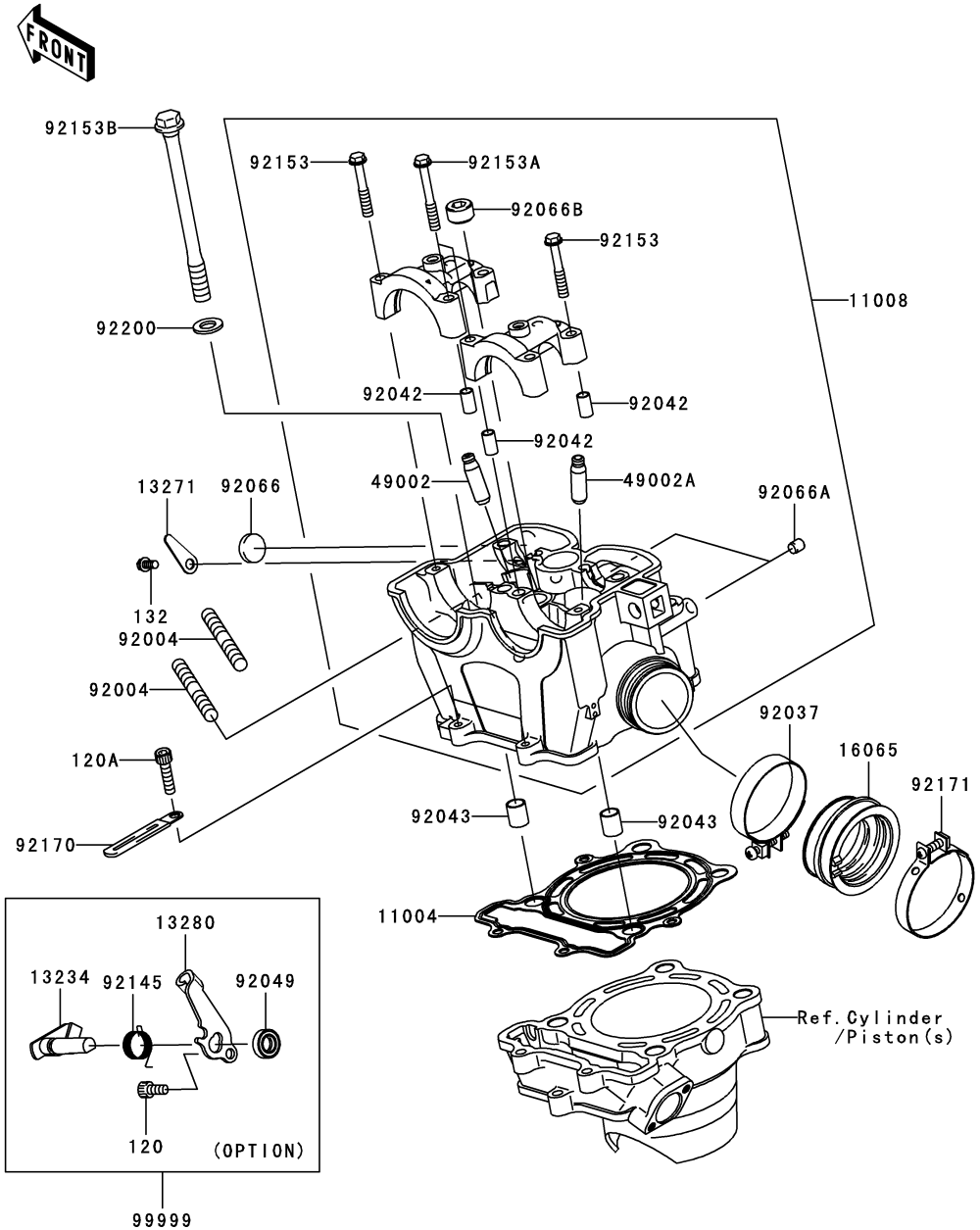

Ref. No.	Part No.	Description	Spec Code	Quantity-KX250 '07 T7F				
11004	11004-0003	GASKET-HEAD		1				
11008	11008-0116	HEAD-COMP-CYLINDER		1				
13234	13234-0009	SHAFT-COMP,DECOMP		1				
	(OPTION)							
13271	13271-0675	PLATE		1				
13280	13280-0038	HOLDER,DECOMP		1				
	(OPTION)							
16065	16065-0041	HOLDER-CARBURETOR		1				
49002	49002-0003	GUIDE-VALVE		AR				
49002A	49002-0016	GUIDE-VALVE		AR				
92004	92004-1249	STUD,8X22		2				
92037	92037-1523	CLAMP		1				
92042	92042-007	PIN,DOWEL,6.3X8X14		4				
92043	92043-4009	PIN,10.1X12X14		2				
92049	92049-1196	SEAL-OIL		1				
	(OPTION)							
92066	92066-0024	PLUG,4X18		1				
92066A	92066-1012	PLUG,OIL LINE,7.2X8		2				
92066B	92066-3777	PLUG,10X16.6		1				
92145	92145-0048	SPRING		1				
	(OPTION)							
92153	92153-0338	BOLT,6X38		6				
92153A	92153-0339	BOLT,6X45		2				
92153B	92153-0341	BOLT,10X122		4				
92170	92170-1514	CLAMP		2				
92171	92171-0314	CLAMP		1				
92200	92200-1339	WASHER,10.5X19X2.3		4				
99999	99999-0023	KIT.,MANUAL DECOMP		1				
	(OPTION)							
120	120P0612	BOLT-SOCKET,6X12		1				
	(OPTION)							
120A	120P0625	BOLT-SOCKET,6X25		2				
132	132L0612	BOLT-FLANGED-SMALL,6X12		1				

GRID NO. **B-4**

This grid covers:
Cylinder Head Cover

E1112

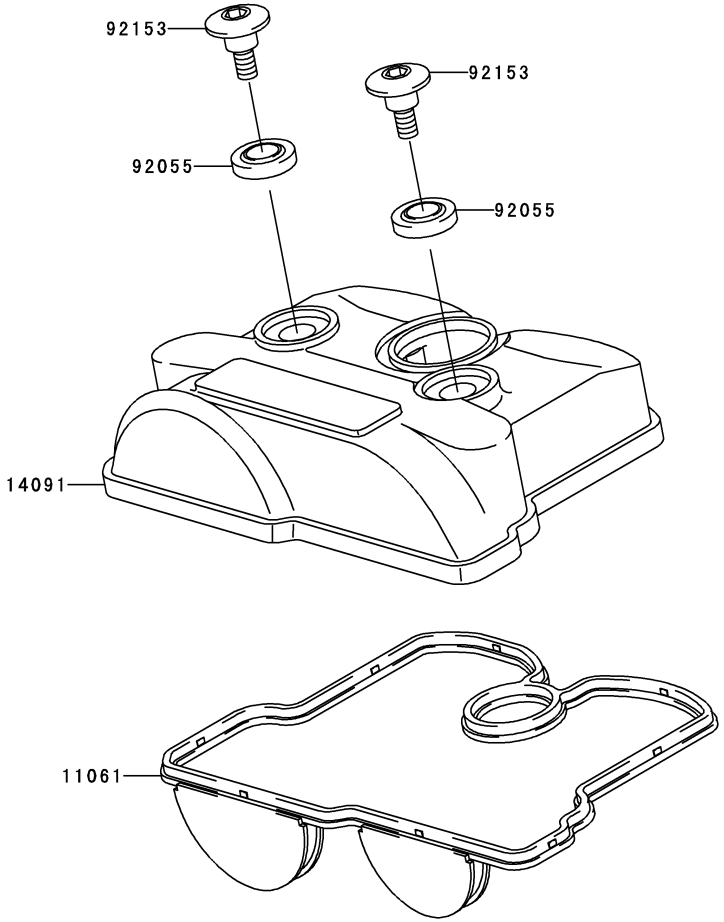

Ref. No.	Part No.	Description	Spec Code	Quantity-KX250 ’07 T7F				
11061	11061-0024	GASKET,CYLINDER HEAD COVER		1				
14091	14091-0058	COVER,CYLINDER HEAD		1				
92055	92055-1352	RING-O,HEAD COVER BOLT		2				
92153	92153-1181	BOLT,SOCKET,6MM		2				

E1120

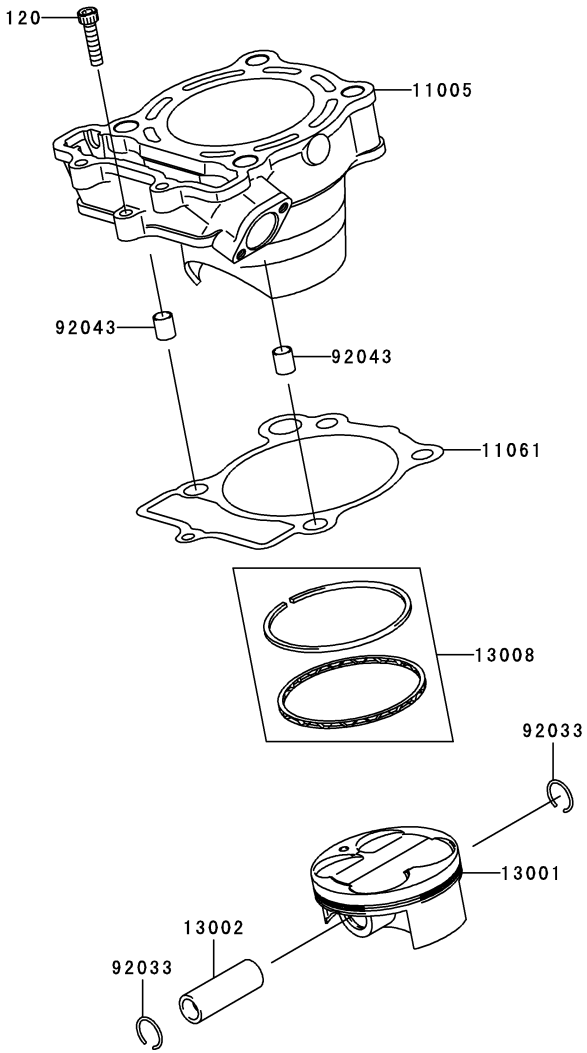

Ref. No.	Part No.	Description	Spec Code	Quantity-KX250 ’07 T7F				
11005	11005-0069	CYLINDER-ENGINE		1				
11061	11061-0025	GASKET,CYLINDER BASE		1				
13001	13001-0088	PISTON-ENGINE		1				
13002	13002-0018	PIN-PISTON		1				
13008	13008-0028	RING-SET-PISTON		1				
92033	92033-1161	RING-SNAP,PISTON PIN		2				
92043	92043-4009	PIN,10.1X12X14		2				
120	120P0625	BOLT-SOCKET,6X25		1				

E1130

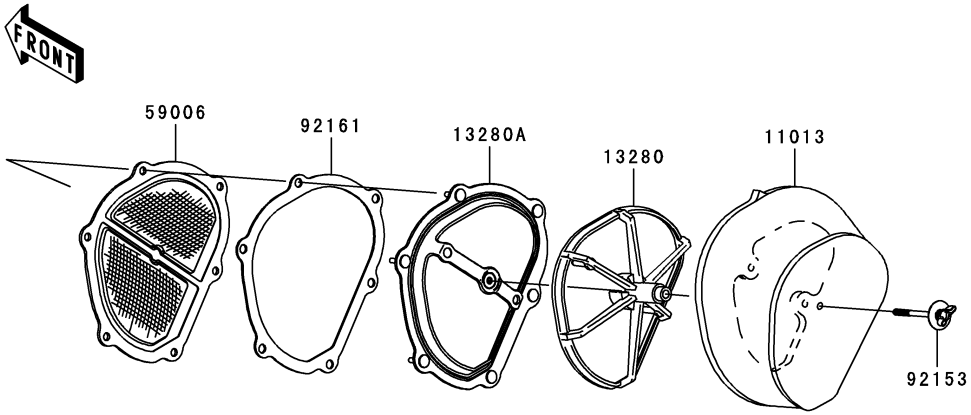

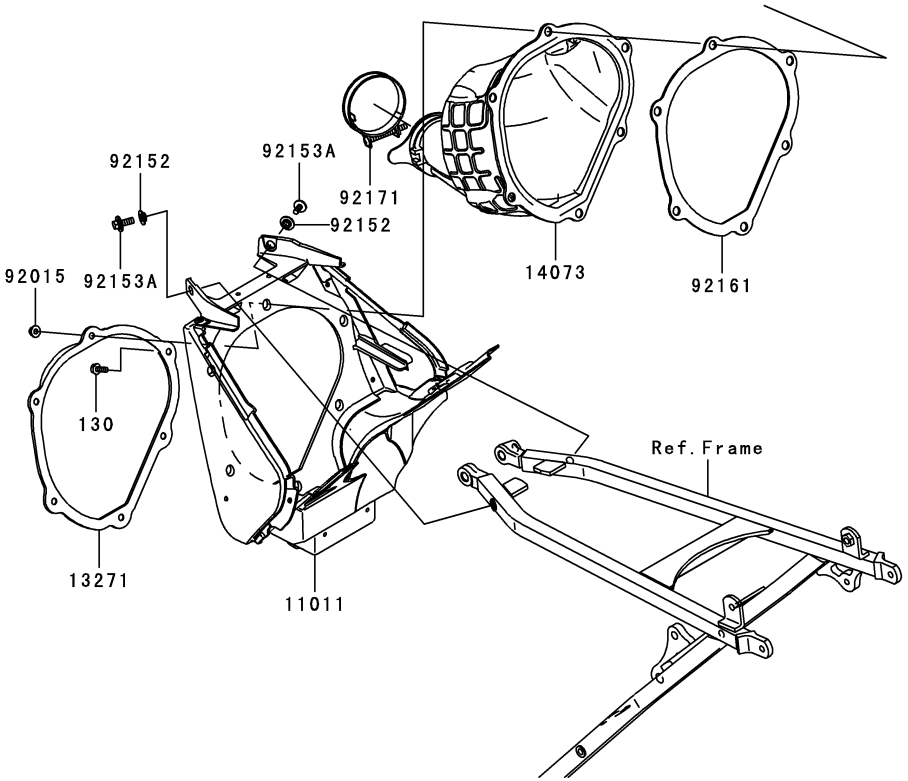

Ref. No.	Part No.	Description	Spec Code	Quantity-KX250 '07 T7F				
11011	11011-0055-6Z	CASE-AIR FILTER,F.BLACK		1				
11013	11013-0011	ELEMENT-AIR FILTER		1				
13271	13271-0730	PLATE,DUCT FITTING		1				
13280	13280-0108	HOLDER,ELEMENT		1				
13280A	13280-0170	HOLDER		1				
14073	14073-0139	DUCT,FUNNEL		1				
59006	59006-0011	ARRESTER-FLAME		1				
92015	92015-1259	NUT,FLANGED,5MM		5				
92152	92152-0275	COLLAR		2				
92153	92153-0623	BOLT,6X75		1				
92153A	92153-0863	BOLT,6X16		2				
92161	92161-0213	DAMPER		2				
92171	92171-0651	CLAMP,CARBURETOR,DUCT		1				
130	130G0512	BOLT-FLANGED,5X12		1				

E1140

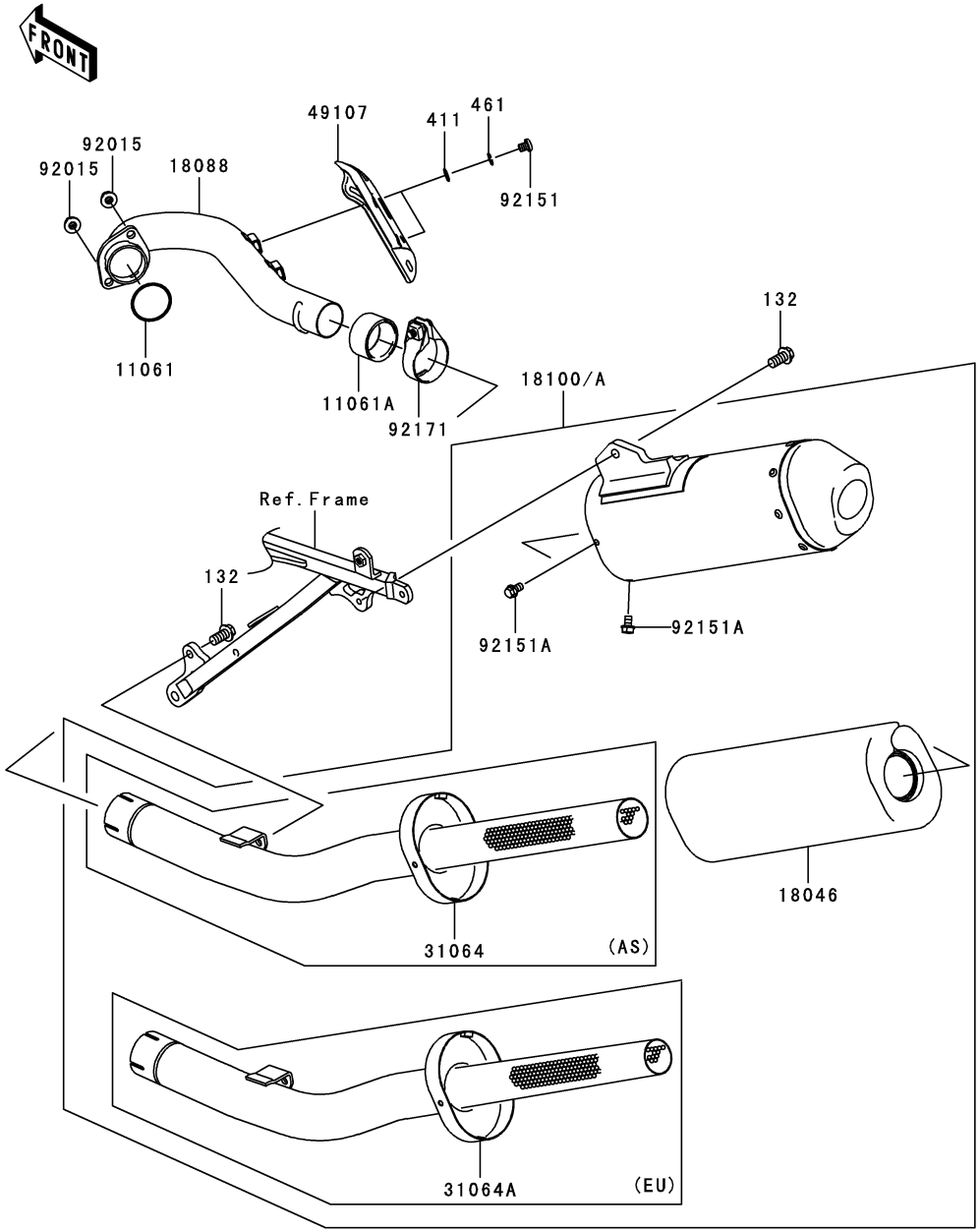

Ref. No.	Part No.	Description	Spec Code	Quantity-KX250 '07				
				T7F				
11061	11061-0027	GASKET		1				
11061A	11061-0101	GASKET		1				
18046	18046-0042	WOOL		1				
18088	18088-0258	PIPE-EXHAUST		1				
18100	18100-0049	BODY-ASSY-MUFFLER						
	L- -		AS	1				
18100A	18100-0051	BODY-ASSY-MUFFLER,96DB						
	L- -		EU	1				
31064	31064-0078	PIPE-COMP						
	L- -		AS	1				
31064A	31064-0085	PIPE-COMP						
	L- -		EU	1				
49107	49107-0058	COVER-EXHAUST PIPE		1				
92015	92015-1402	NUT,8MM		2				
92151	92151-1449	BOLT,SOCKET,6X10		2				
92151A	92151-1822	BOLT,FLANGED,6X10		4				
92171	92171-0491	CLAMP		1				
132	132L0818	BOLT-FLANGED-SMALL,8X18		2				
411	411S0600	WASHER-PLAIN,6MM		2				
461	461S0600	WASHER-SPRING,6MM		2				

E1210

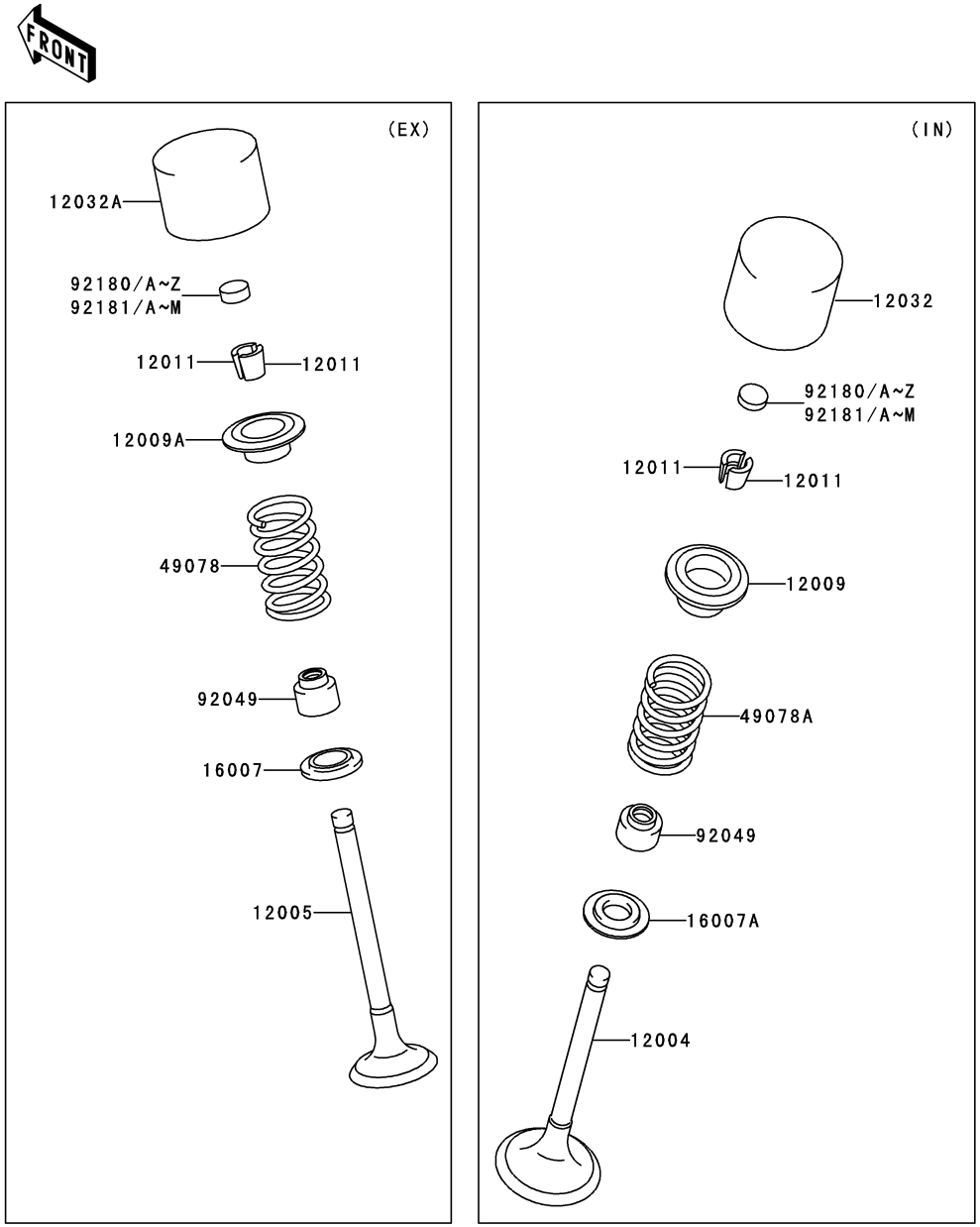

Ref. No.	Part No.	Description	Spec Code	Quantity-KX250 '07 T7F
12004	12004-0023	VALVE-INTAKE		2
12005	12005-0002	VALVE-EXHAUST		2
12009	12009-0010	RETAINER-VALVE SPRING		2
12009A	12009-1073	RETAINER-VALVE SPRING		2
12011	12011-1053	COLLET		8
12032	12032-0005	TAPPET,IN		2
12032A	12032-0006	TAPPET,EX		2
16007	16007-0002	SEAT-SPRING		2
16007A	16007-0029	SEAT-SPRING		2
49078	49078-0003	SPRING-ENGINE VALVE		2
49078A	49078-0056	SPRING-ENGINE VALVE		2
92049	92049-1349	SEAL-OIL,VSB 4.3 7.5 5.3 8.3		4
92180	92180-0167	SHIM,T=2.500		4
92180A	92180-0168	SHIM,T=2.525		AR
92180B	92180-0169	SHIM,T=2.550		AR
92180C	92180-0170	SHIM,T=2.575		AR
92180D	92180-0171	SHIM,T=2.600		AR
92180E	92180-0172	SHIM,T=2.625		AR
92180F	92180-0173	SHIM,T=2.650		AR
92180G	92180-0174	SHIM,T=2.675		AR
92180H	92180-0175	SHIM,T=2.700		AR
92180I	92180-0176	SHIM,T=2.725		AR
92180J	92180-0177	SHIM,T=2.750		AR
92180K	92180-0178	SHIM,T=2.775		AR
92180L	92180-0179	SHIM,T=2.800		AR
92180M	92180-0180	SHIM,T=2.825		AR
92180N	92180-0181	SHIM,T=2.850		AR
92180O	92180-0182	SHIM,T=2.875		AR
92180P	92180-0183	SHIM,T=2.900		AR
92180Q	92180-0184	SHIM,T=2.925		AR
92180R	92180-0185	SHIM,T=2.950		AR
92180S	92180-0186	SHIM,T=2.975		AR
92180T	92180-0187	SHIM,T=3.000		AR
92180U	92180-0188	SHIM,T=3.025		AR
92180V	92180-0189	SHIM,T=3.050		AR
92180W	92180-0190	SHIM,T=3.075		AR
92180X	92180-0191	SHIM,T=3.100		AR
92180Y	92180-0192	SHIM,T=3.125		AR
92180Z	92180-0193	SHIM,T=3.150		AR
92181	92180-0194	SHIM,T=3.175		AR

E1210

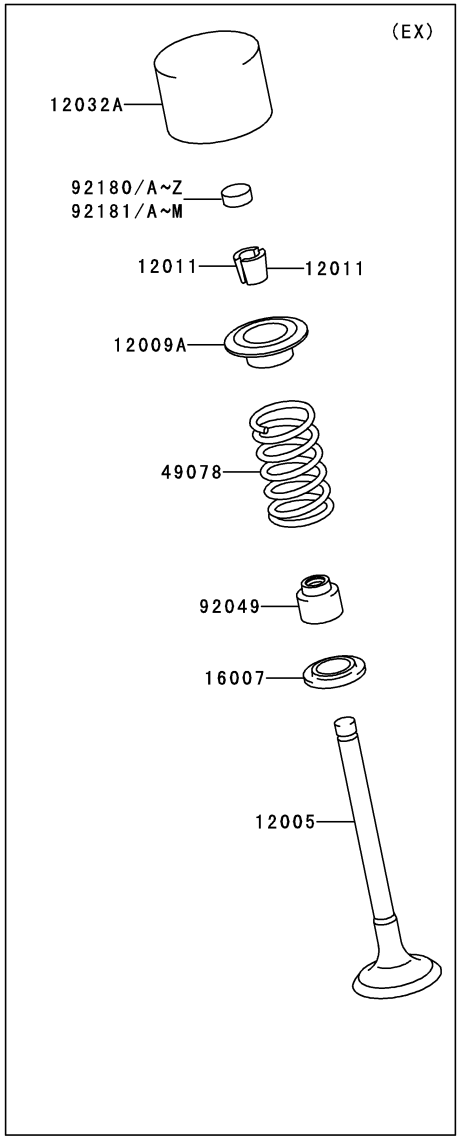

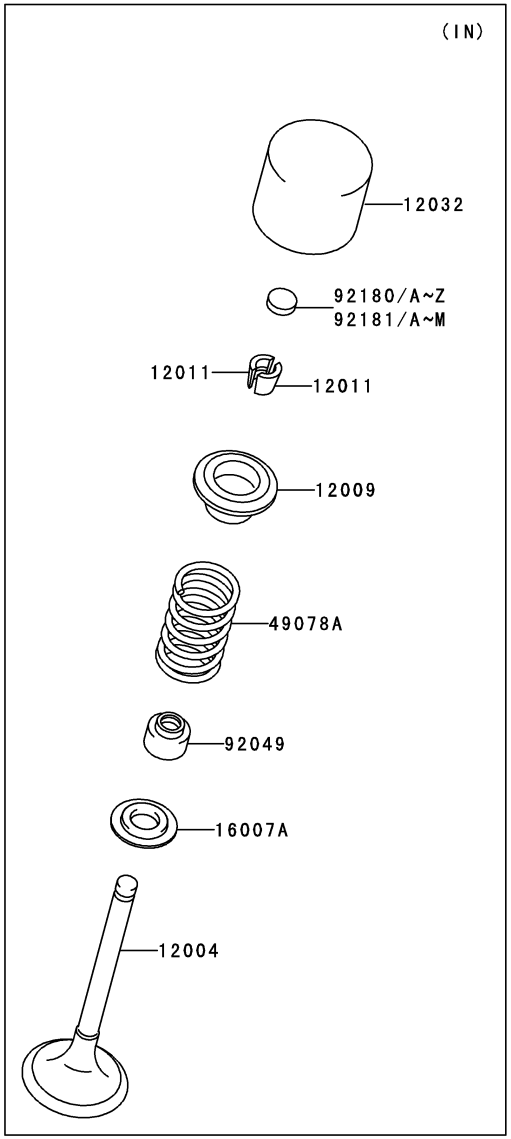

Ref. No.	Part No.	Description	Spec Code	Quantity-KX250 '07 T7F
92181A	92180-0195	SHIM,T=3.200		AR
92181B	92180-0196	SHIM,T=3.225		AR
92181C	92180-0197	SHIM,T=3.250		AR
92181D	92180-0198	SHIM,T=3.275		AR
92181E	92180-0199	SHIM,T=3.300		AR
92181F	92180-0200	SHIM,T=3.325		AR
92181G	92180-0201	SHIM,T=3.350		AR
92181H	92180-0202	SHIM,T=3.375		AR
92181I	92180-0203	SHIM,T=3.400		AR
92181J	92180-0204	SHIM,T=3.425		AR
92181K	92180-0205	SHIM,T=3.450		AR
92181L	92180-0206	SHIM,T=3.475		AR
92181M	92180-0207	SHIM,T=3.500		AR

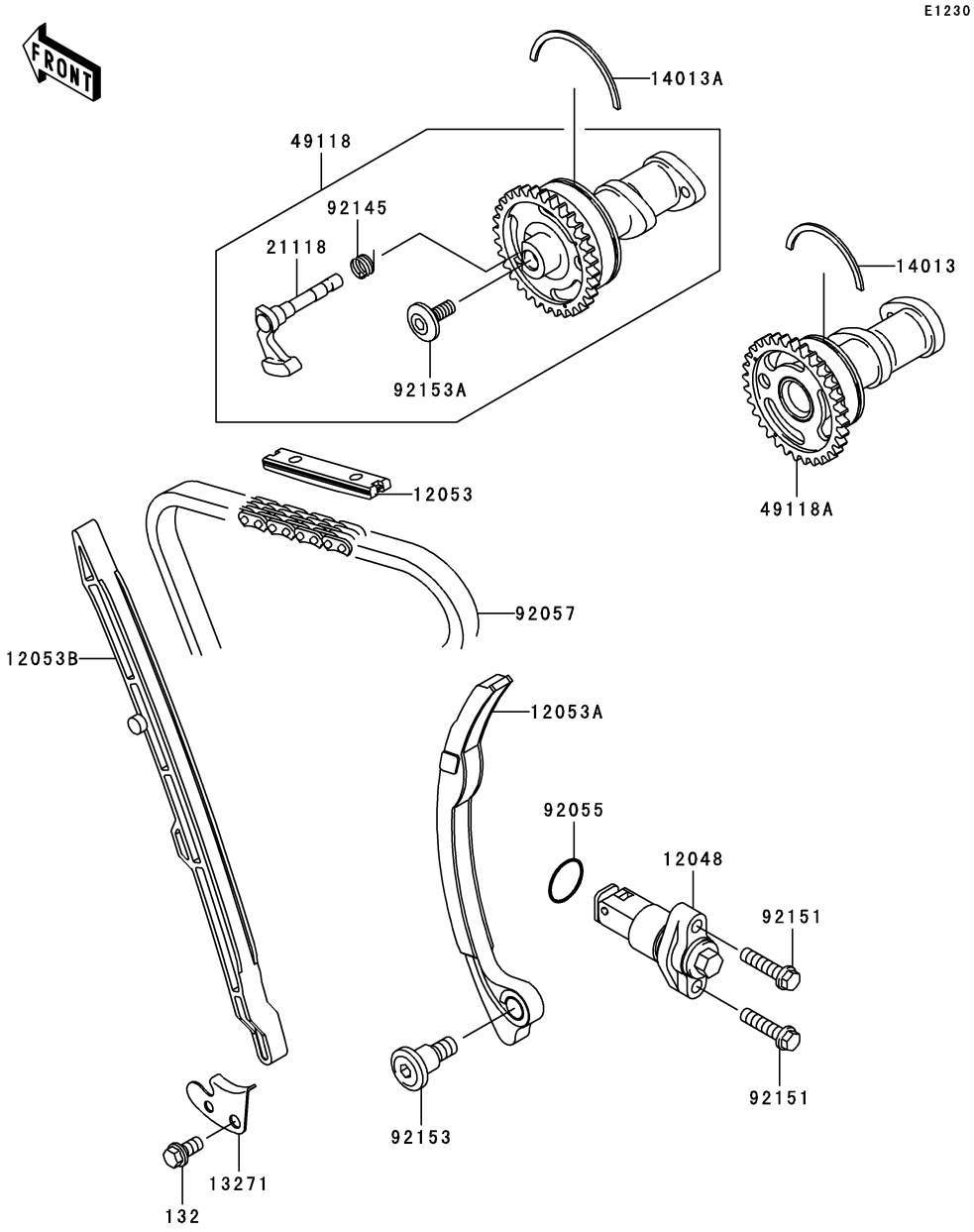

Ref. No.	Part No.	Description	Spec Code	Quantity-KX250 ’07				
				T7F				
12048	12048-1181	TENSIONER-ASSY		1				
12053	12053-0009	GUIDE-CHAIN,UPP		1				
12053A	12053-0010	GUIDE-CHAIN,RR		1				
12053B	12053-0017	GUIDE-CHAIN,FR		1				
13271	13271-0808	PLATE,CAM CHAIN STOPPER		1				
14013	14013-0001	RING-POSITION		1				
14013A	14013-0002	RING-POSITION		1				
21118	21118-0004	DECOMPRESSOR		1				
49118	49118-0065	CAMSHAFT-COMP,EXHAUST		1				
49118A	49118-0066	CAMSHAFT-COMP,INTAKE		1				
92055	92055-086	RING-O,18.8X1.9		1				
92057	92057-0030	CHAIN,CAM,92RH2010-114		1				
92145	92145-0365	SPRING,DECOMP		1				
92151	92151-1930	BOLT,FLANGED-SMALL,6X25		2				
92153	92153-0572	BOLT,12X24.5		1				
92153A	92153-0918	BOLT,SOCKET,6X16		1				
132	132G0612	BOLT-FLANGED-SMALL,6X12		1				

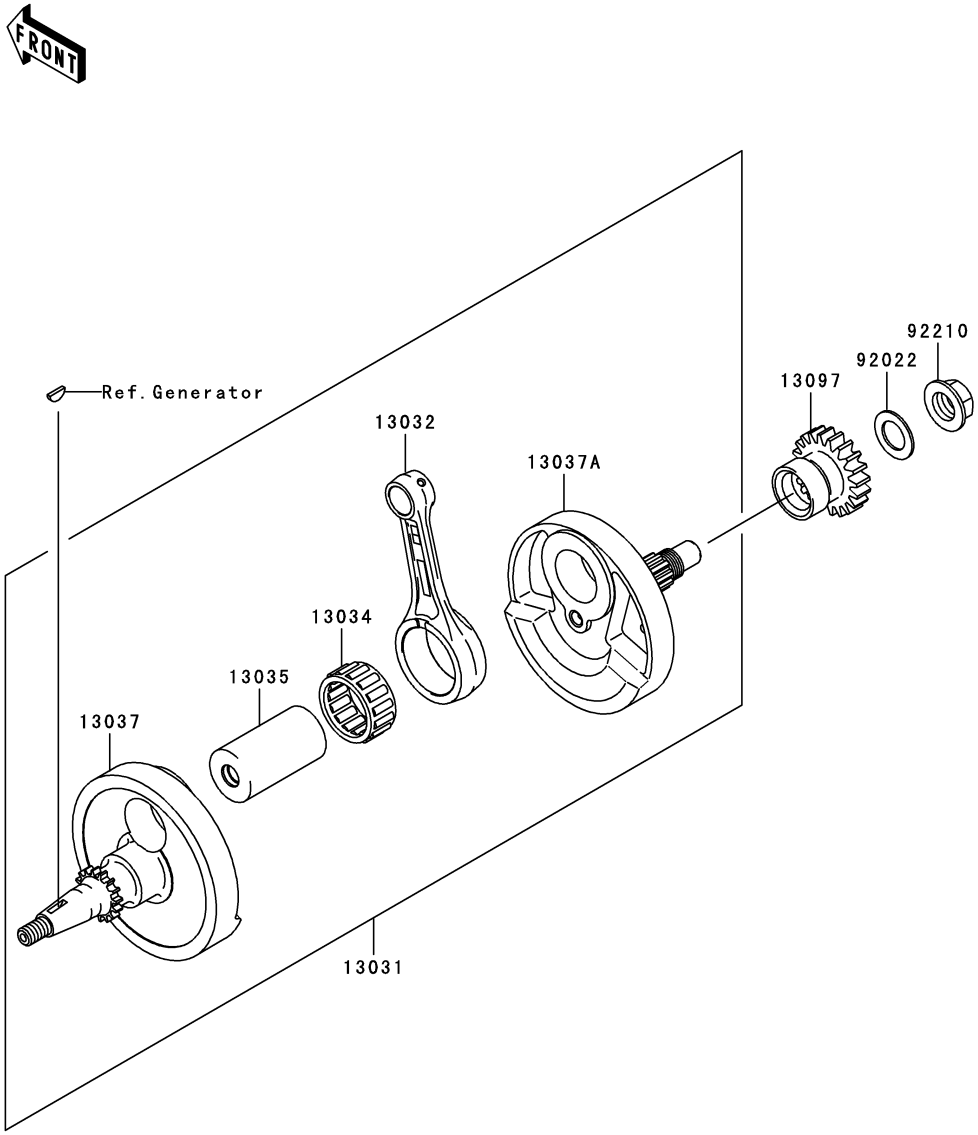

Ref. No.	Part No.	Description	Spec Code	Quantity-KX250 '07 T7F
13031	13031-0074	CRANKSHAFT-COMP		1
13032	13032-0047	ROD-CONNECTING		1
13034	13034-0014	BEARING-BIG END,B4		1
13035	13035-0015	PIN-CRANK		1
13037	13037-0089	CRANKSHAFT,LH		1
13037A	13037-0108	CRANKSHAFT,RH		1
13097	13097-0008	GEAR-PRIMARY SPUR,20T		1
92022	92022-054	WASHER,16.5X27X1.4		1
92210	92210-0350	NUT,LEFT HANDED,16MM		1

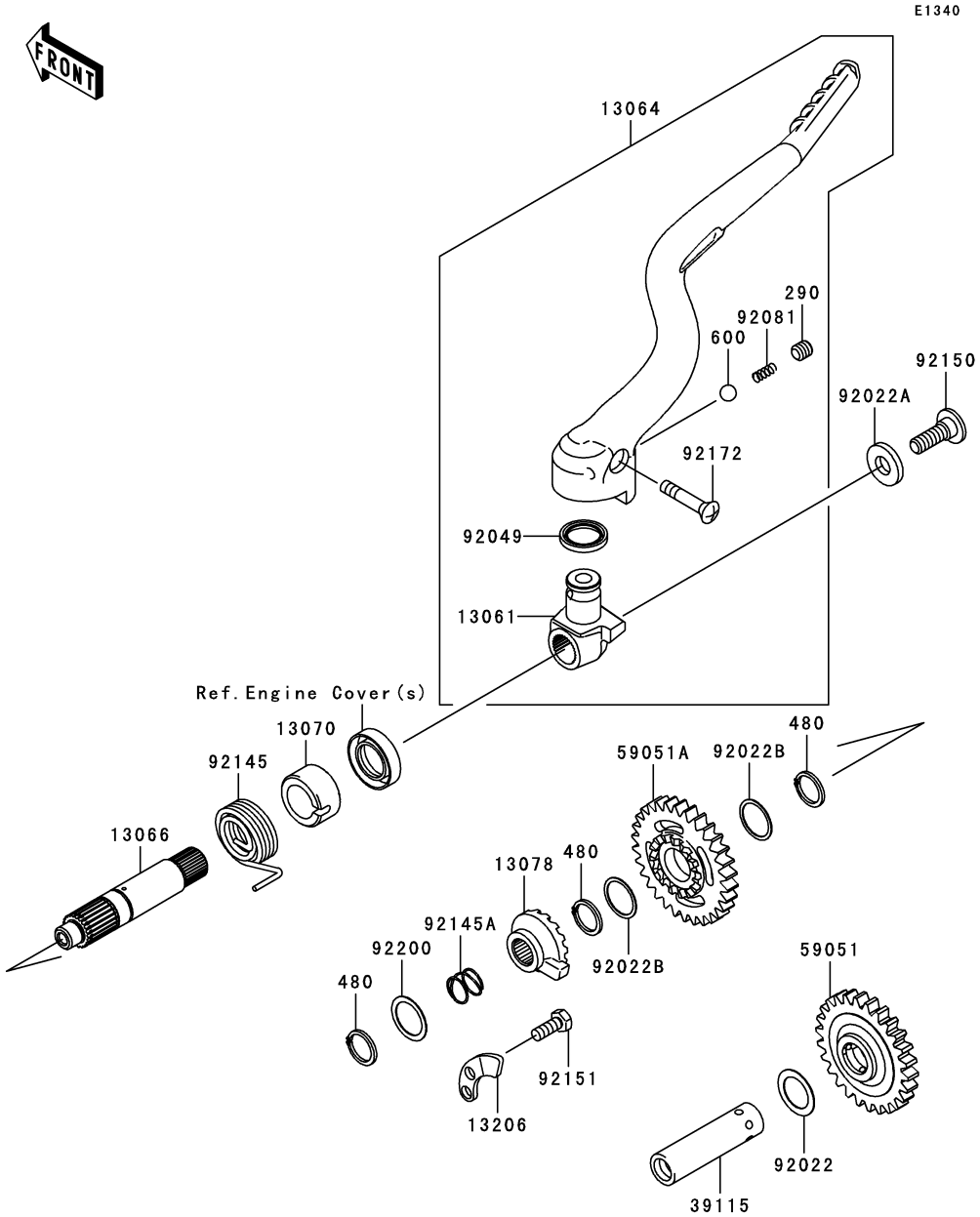

Ref. No.	Part No.	Description	Spec Code	Quantity-KX250 ’07				
				T7F				
13061	13061-0147	BOSS		1				
13064	13064-0043	LEVER-ASSY-KICK		1				
13066	13066-0004	SHAFT-KICK		1				
13070	13070-0011	GUIDE		1				
13078	13078-0005	RATCHET		1				
13206	13206-1062	GUIDE-KICK		1				
39115	39115-0012	SHAFT-IDLER,KICK		1				
59051	59051-0006	GEAR-SPUR,KICK STARTER,26T		1				
59051A	59051-0033	GEAR-SPUR,KICK STARTER,28T		1				
92022	92022-1614	WASHER,17.3X25X0.5		1				
92022A	92022-1944	WASHER,10X22X3.2		1				
92022B	92022-271	WASHER,18.3X22X0.5		2				
92049	92049-1387	SEAL-OIL,KICK PEDAL		1				
92081	92081-020	SPRING,KICK PEDAL		1				
92145	92145-0051	SPRING,KICK STARTER		1				
92145A	92145-0162	SPRING		1				
92150	92150-1858	BOLT,8X25		1				
92151	92151-1652	BOLT,6X16		1				
92172	92172-0248	SCREW,6X33		1				
92200	92200-0075	WASHER,18.3X24X0.5		1				
290	290CA0808	SCREW-SET-SOCKET,8X8		1				
480	480J1800	CIRCLIP-TYPE-C,18MM		3				
600	600A0800	BALL-STEEL,1/4"		1				

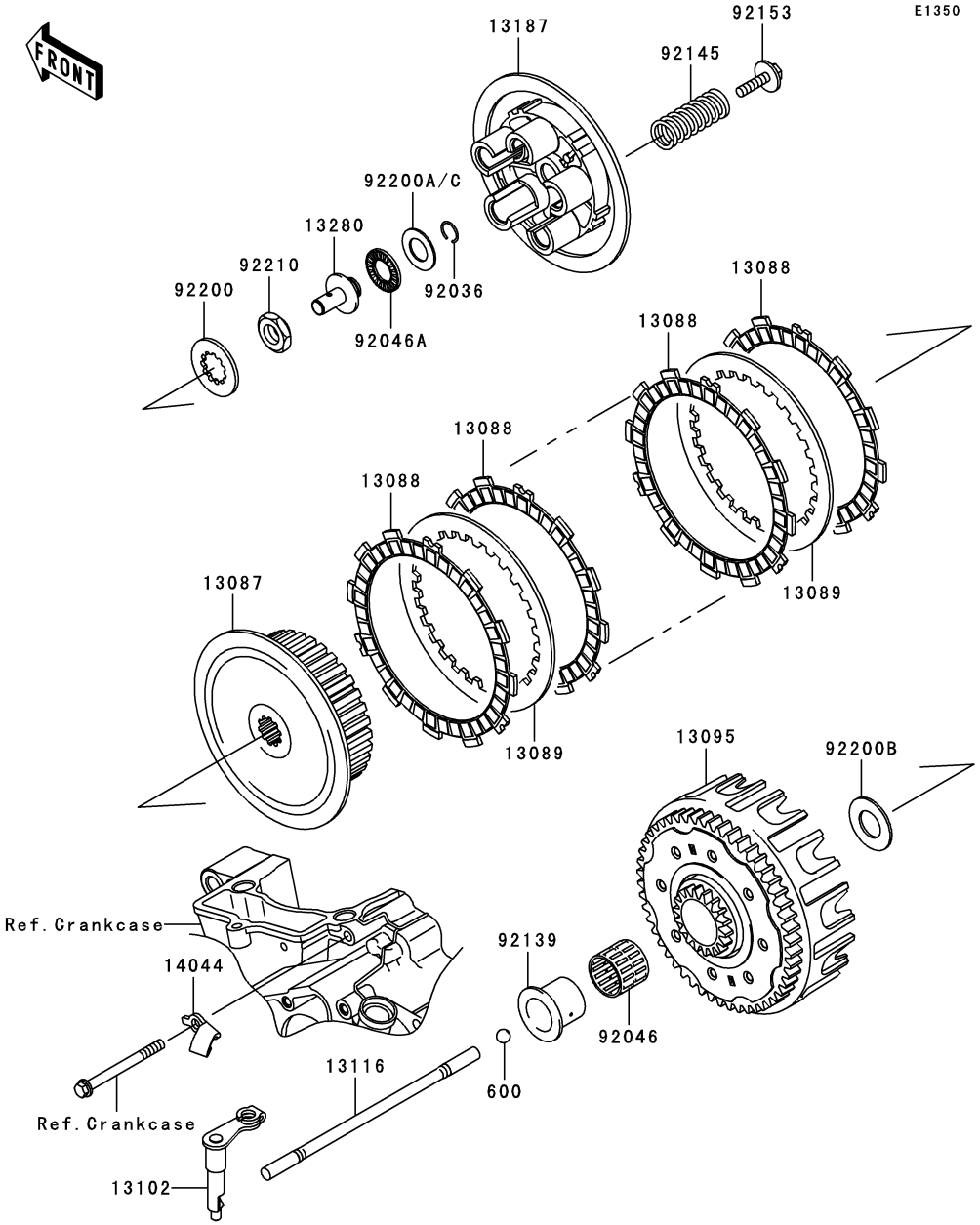

Ref. No.	Part No.	Description	Spec Code	Quantity-KX250 ’07				
				T7F				
13087	13087-0017	HUB-CLUTCH		1				
13088	13088-0018	PLATE-FRICTION		8				
13089	13089-013	PLATE-CLUTCH,T=1.6		7				
13095	13095-0049	HOUSING-COMP-CLUTCH		1				
13102	13102-0020	RELEASE-COMP-CLUTCH		1				
13116	13116-0003	ROD-PUSH		1				
13187	13187-1089	PLATE-CLUTCH OPERATING		1				
13280	13280-0163	HOLDER		1				
14044	14044-0002	HOLDER-CABLE,CLUTCH		1				
92036	92036-007	RING-SNAP,PISTON PIN		1				
92046	92046-0016	BEARING-NEEDLE,WRS273124A		1				
92046A	92046-1190	BEARING-NEEDLE,FNTA-1326		1				
92139	92139-0014	BUSHING		1				
92145	92145-0351	SPRING,K=10.7N/MM		5				
92153	92153-1123	BOLT,6X25		5				
92200	92200-0027	WASHER,21.6X38X2.5		1				
92200A	92200-0045	WASHER,13.4X25X1.0		AR				
92200B	92200-0098	WASHER,22.3X43X2		1				
92200C	92200-1548	WASHER,13.4X25.0X1.5		1				
92210	92210-1207	NUT,16MM		1				
600	600A1000	BALL-STEEL,5/16"		1				

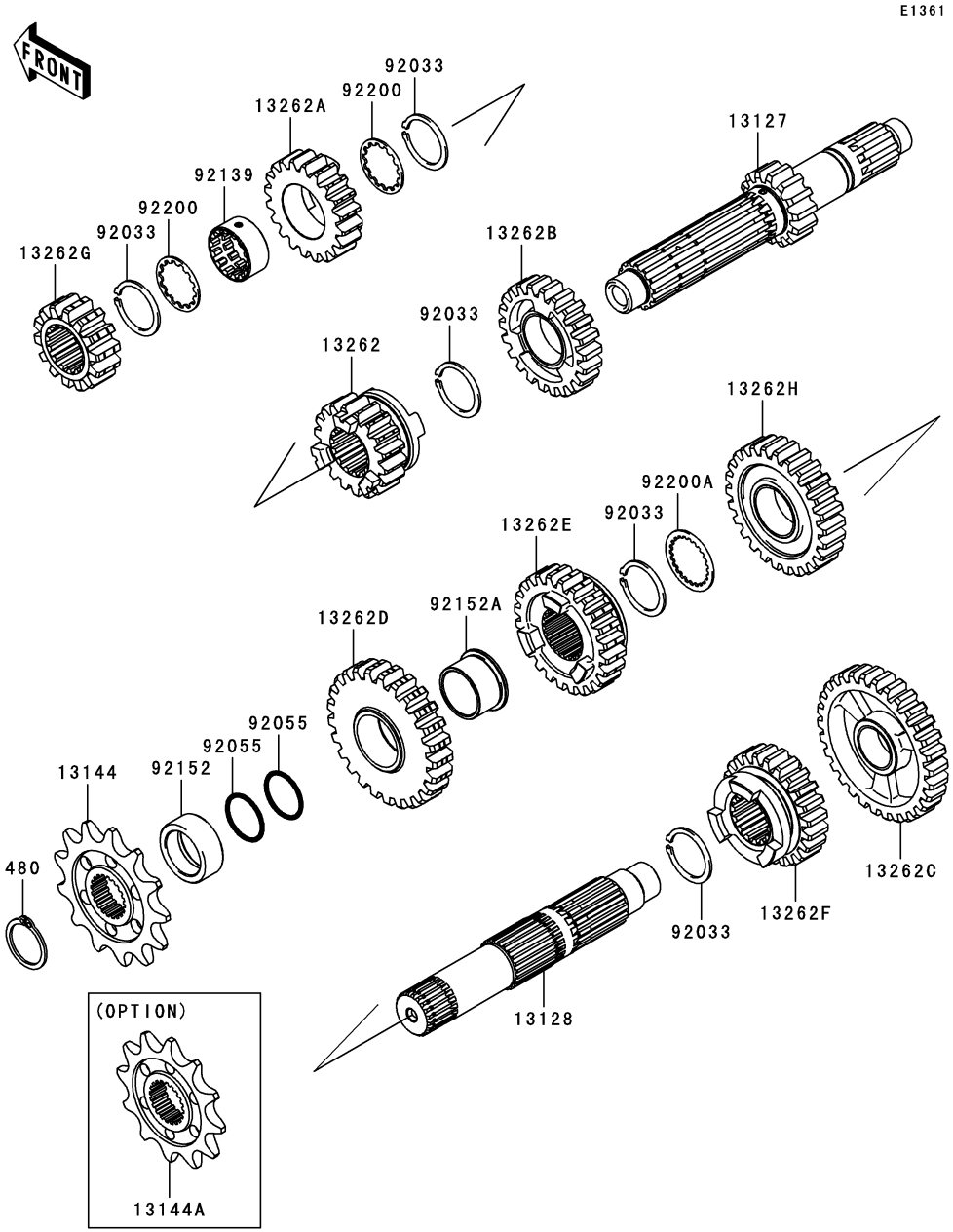

Ref. No.	Part No.	Description	Spec Code	Quantity-KX250 ’07				
				T7F				
13127	13127-0045	GEAR,INPUT LOW,14T		1				
13128	13128-0032	SHAFT-TRANSMISSION OUTPUT		1				
13144	13144-0035	SPROCKET-OUTPUT,13T		1				
13144A	13144-0036 (OPTION)	SPROCKET-OUTPUT,12T		1				
13262	13262-0382	GEAR,INPUT 3RD,18T		1				
13262A	13262-0383	GEAR,INPUT 4TH,20T		1				
13262B	13262-0384	GEAR,INPUT 5TH,22T		1				
13262C	13262-0385	GEAR,OUTPUT LOW,30T		1				
13262D	13262-0386	GEAR,OUTPUT 2ND,25T		1				
13262E	13262-0388	GEAR,OUTPUT 4TH,24T		1				
13262F	13262-0389	GEAR,OUTPUT 5TH,23T		1				
13262G	13262-0437	GEAR,INPUT 2ND,14T		1				
13262H	13262-0495	GEAR,OUTPUT 3RD,26T		1				
92033	92033-1270	RING-SNAP		5				
92055	92055-055	RING-O,19.5X1.5		2				
92139	92139-0159	BUSHING		1				
92152	92152-0377	COLLAR		1				
92152A	92152-0443	COLLAR		1				
92200	92200-0028	WASHER,24X28.6X1		2				
92200A	92200-0287	WASHER,25X30.1X1		1				
480	480J2200	CIRCLIP-TYPE-C,22MM		1				

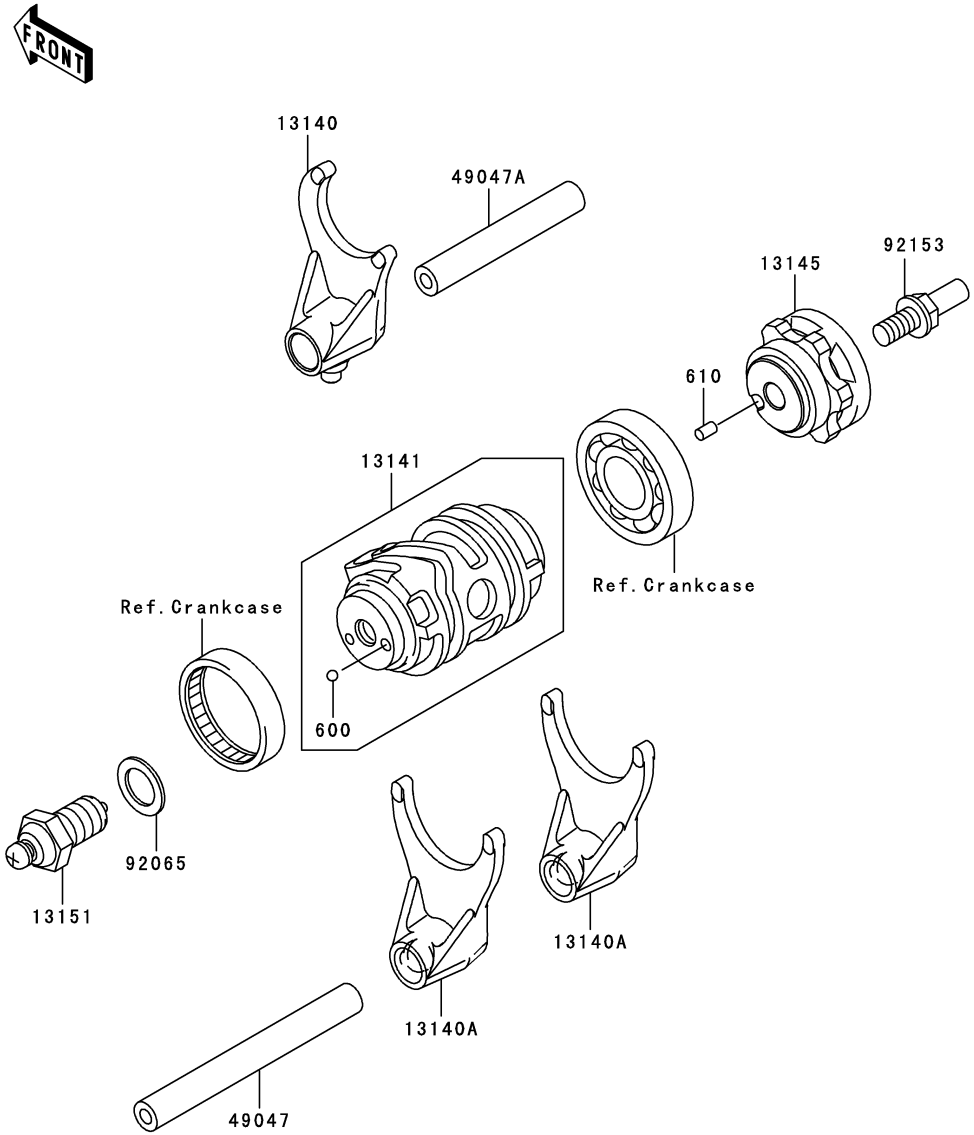

Ref. No.	Part No.	Description	Spec Code	Quantity-KX250 ’07 T7F				
13140	13140-0038	FORK-SHIFT,IN		1				
13140A	13140-0039	FORK-SHIFT,OUT		2				
13141	13141-0022	DRUM-CHANGE		1				
13145	13145-0024	CAM-CHANGE DRUM		1				
13151	13151-0006	SWITCH-COMP,NEUTRAL		1				
49047	49047-0003	ROD-SHIFT,OUTPUT,L=94.5		1				
49047A	49047-0004	ROD-SHIFT,INPUT,L=63		1				
92065	92065-058	GASKET,10.5X16X1		1				
92153	92153-1735	BOLT		1				
600	600A0700	BALL-STEEL,7/32"		1				
610	610A0408	ROLLER,4X8		1				

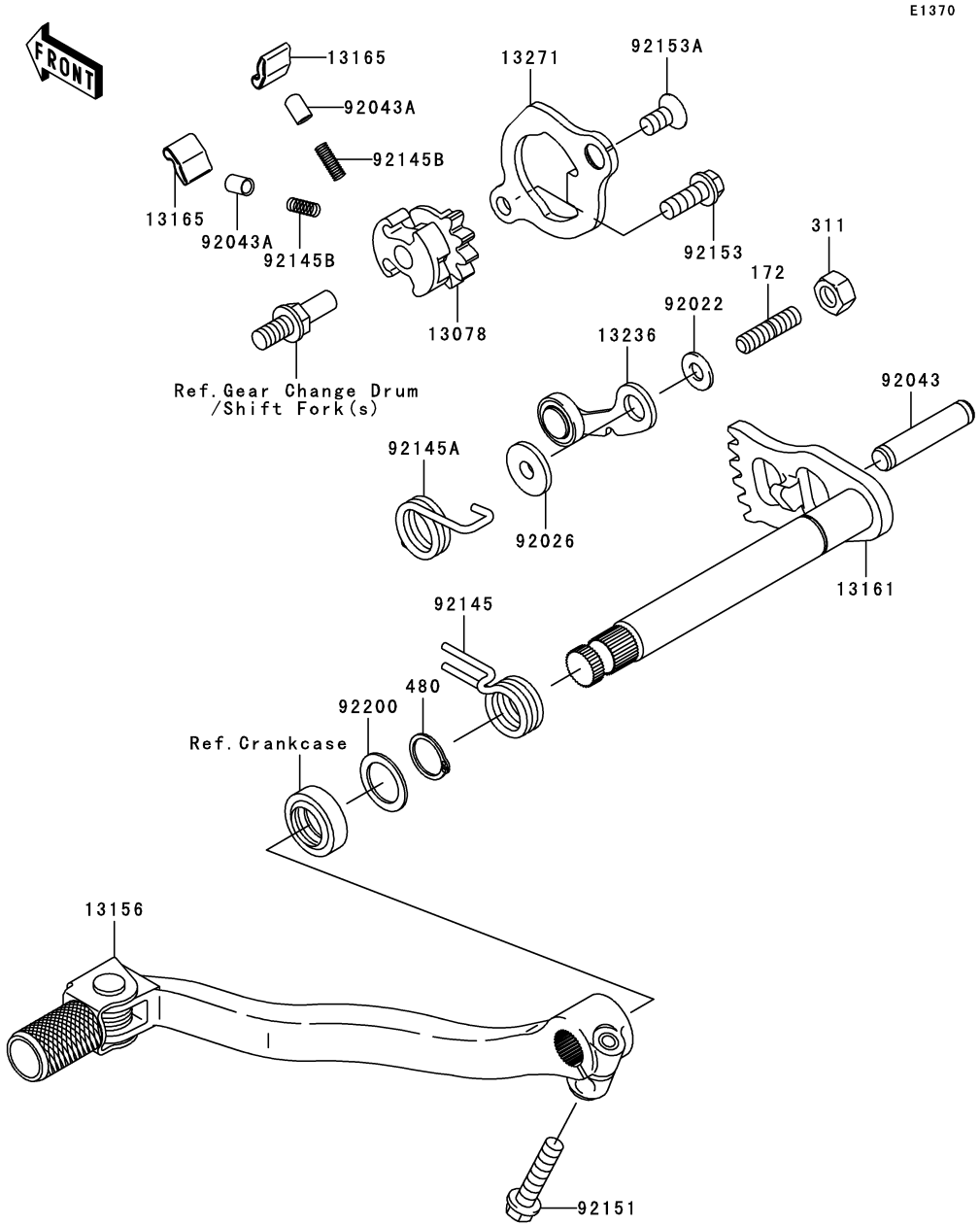

Ref. No.	Part No.	Description	Spec Code	Quantity-KX250 ’07				
				T7F				
13078	13078-0010	RATCHET		1				
13156	13156-0050	LEVER-CHANGE,PEDAL		1				
13161	13161-0047	LEVER-COMP-CHANGE SHAFT		1				
13165	13165-0017	PAWL		2				
13236	13236-0128	LEVER-COMP,POSITION		1				
13271	13271-0802	PLATE		1				
92022	92022-1827	WASHER,6X12.8X1.2		1				
92026	92026-1217	SPACER		1				
92043	92043-0017	PIN,8X39		1				
92043A	92043-1676	PIN,PLUNGER		2				
92145	92145-0052	SPRING,RETURN		1				
92145A	92145-0154	SPRING,POSITION		1				
92145B	92145-0453	SPRING		2				
92151	92151-1930	BOLT,FLANGED-SMALL,6X25		1				
92153	92153-0825	BOLT,6X16		1				
92153A	92153-1669	BOLT,TORX,6X8.7		1				
92200	92200-0029	WASHER,14.2X20X1		1				
172	172G0612	BOLT-STUD,6X12		1				
311	311G0600	NUT-HEX,6MM		1				
480	480J1400	CIRCLIP-TYPE-C,14MM		1				

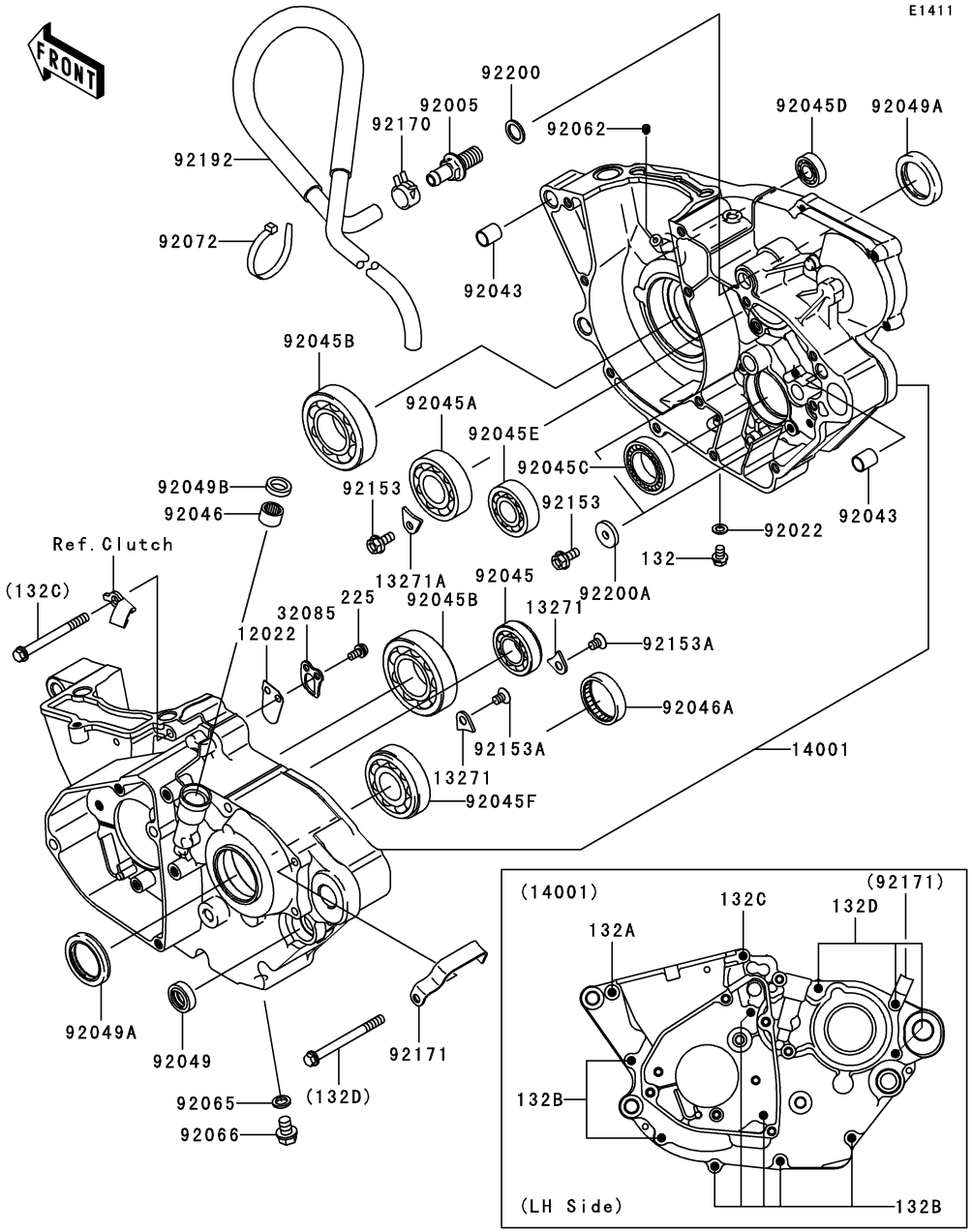

Ref. No.	Part No.	Description	Spec Code	Quantity-KX250 '07	T7F
12022	12022-0006	VALVE-REED		1	
13271	13271-0886	PLATE		2	
13271A	13271-0887	PLATE		1	
14001	14001-0097	SET-CRANKCASE		1	
32085	32085-0011	STOPPER,VALVE-REED		1	
92005	92005-0014	FITTING,BREATHER		1	
92022	92022-304	WASHER,6.2X11X1		1	
92043	92043-4009	PIN,10.1X12X14		2	
92045	92045-0013	BEARING-BALL,3TM-SX0391ZC3		1	
92045A	92045-0051	BEARING-BALL,22X50X14		1	
92045B	92045-0052	BEARING-BALL,CRANKSHAFT MAIN		2	
92045C	92045-1058	BEARING-BALL,6905Z		1	
92045D	92045-1123	BEARING-BALL,#628		1	
92045E	92045-1291	BEARING-BALL,TMB203		1	
92045F	92045-1335	BEARING-BALL,SX04A81C3		1	
92046	92046-1010	BEARING-NEEDLE,HK1210		1	
92046A	92046-1221	BEARING-NEEDLE,7E-HKS33X38X8		1	
92049	92049-0015	SEAL-OIL,SD2 14 22 6-1 NS		1	
92049A	92049-0030	SEAL-OIL,TC 30 40 7		2	
92049B	92049-1262	SEAL-OIL,AG0353-F0		1	
92062	92062-0004	NOZZLE		1	
92065	92065-058	GASKET,10.5X16X1		1	
92066	92066-1437	PLUG,DRAIN		1	
92072	92072-3874	BAND		1	
92153	92153-0878	BOLT,6X14		3	
92153A	92153-1736	BOLT,TORX,6X6.7		2	
92170	92170-1938	CLAMP		1	
92171	92171-0579	CLAMP		1	
92192	92192-0102	TUBE,BREATHER		1	
92200	92200-0087	WASHER,12.5X18X1.6		1	
92200A	92200-0120	WASHER,6X20X3.2		2	
132	132G0608	BOLT-FLANGED-SMALL,6X8		1	
132A	132G0640	BOLT-FLANGED-SMALL,6X40		1	
132B	132G0660	BOLT-FLANGED-SMALL,6X60		7	
132C	132G0665	BOLT-FLANGED-SMALL,6X65		1	
132D	132G0670	BOLT-FLANGED-SMALL,6X70		3	
225	225D0510	SCREW-PAN-WSP-CROS,5X10		2	

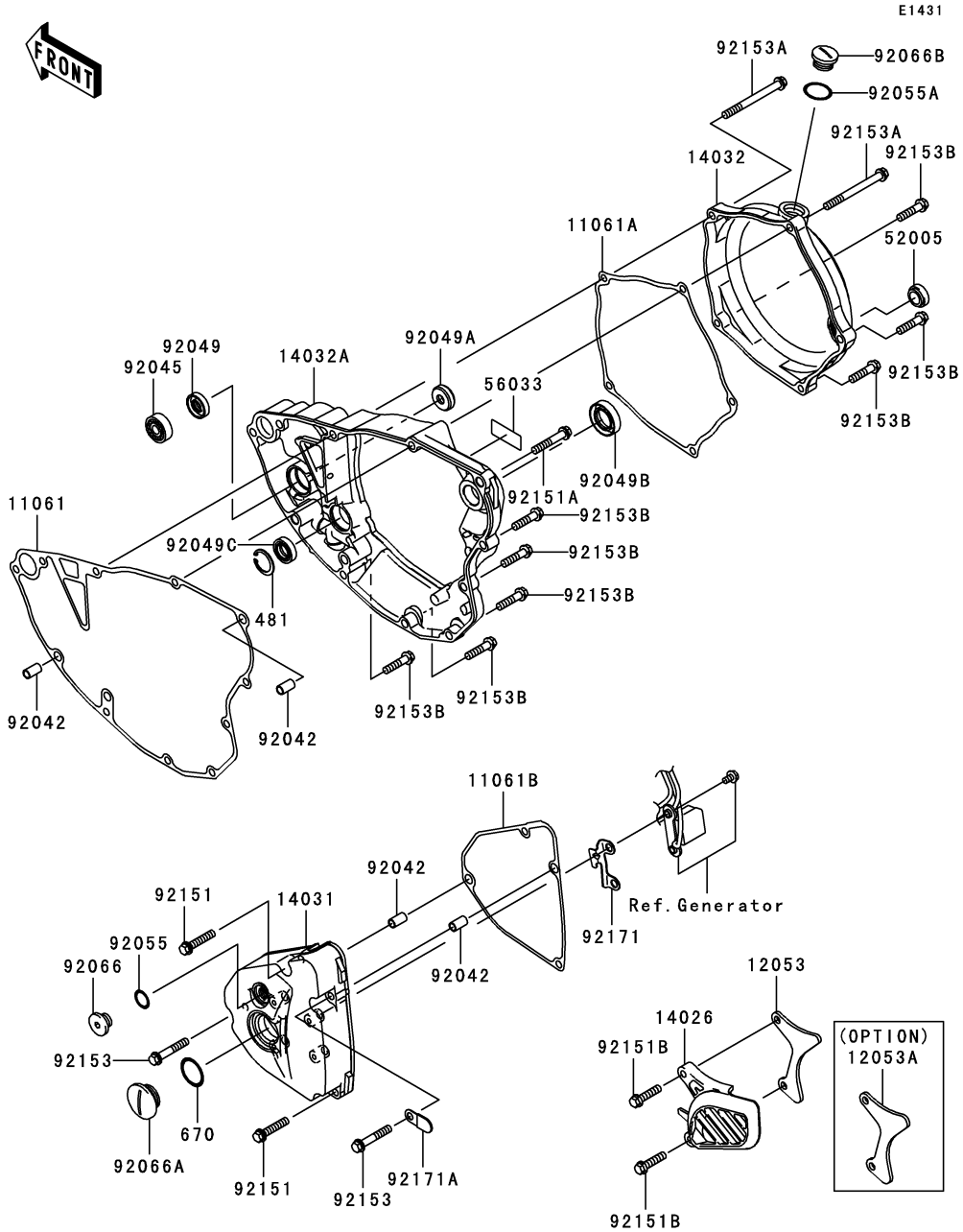

Ref. No.	Part No.	Description	Spec Code	Quantity-KX250 '07	T7F
11061	11061-0030	GASKET,CLUTCH COVER,INNER		1	
11061A	11061-0031	GASKET,CLUTCH COVER,OUTER		1	
11061B	11061-0032	GASKET,GENERATOR COVER		1	
12053	12053-0011	GUIDE-CHAIN,13T		1	
12053A	12053-0018 (OPTION)	GUIDE-CHAIN,12T		1	
14026	14026-0026	COVER-CHAIN		1	
14031	14031-0077	COVER-GENERATOR		1	
14032	14032-0049	COVER-CLUTCH,OUTER		1	
14032A	14032-0057	COVER-CLUTCH,INNER		1	
52005	52005-1009	GAUGE,OIL LEVEL		1	
56033	56033-0049	LABEL-MANUAL,OIL CAPACITY		1	
92042	92042-007	PIN,DOWEL,6.3X8X14		4	
92045	92045-1123	BEARING-BALL,#628		1	
92049	92049-0060	SEAL-OIL,SD 8 22 5 ZS		1	
92049A	92049-0061	SEAL-OIL		1	
92049B	92049-013	SEAL-OIL,SB18307		1	
92049C	92049-1519	SEAL-OIL,TC13225.5		1	
92055	92055-1011	RING-O,13.0X1.9		1	
92055A	92055-1146	RING-O,20X2		1	
92066	92066-0039	PLUG,12X9.1		1	
92066A	92066-0059	PLUG,OIL		1	
92066B	92066-0060	PLUG,OIL		1	
92151	92151-1134	BOLT,6X30		2	
92151A	92151-1135	BOLT,6X35		1	
92151B	92151-1930	BOLT,FLANGED-SMALL,6X25		2	
92153	92153-0668	BOLT,6X35		2	
92153A	92153-0697	BOLT,6X65		2	
92153B	92153-1784	BOLT,FLANGED-SMALL,6X25		8	
92171	92171-0195	CLAMP,HARNESS		1	
92171A	92171-0295	CLAMP		1	
481	481J2200	CIRCLIP		1	
670	670B2022	O RING,22MM		1	

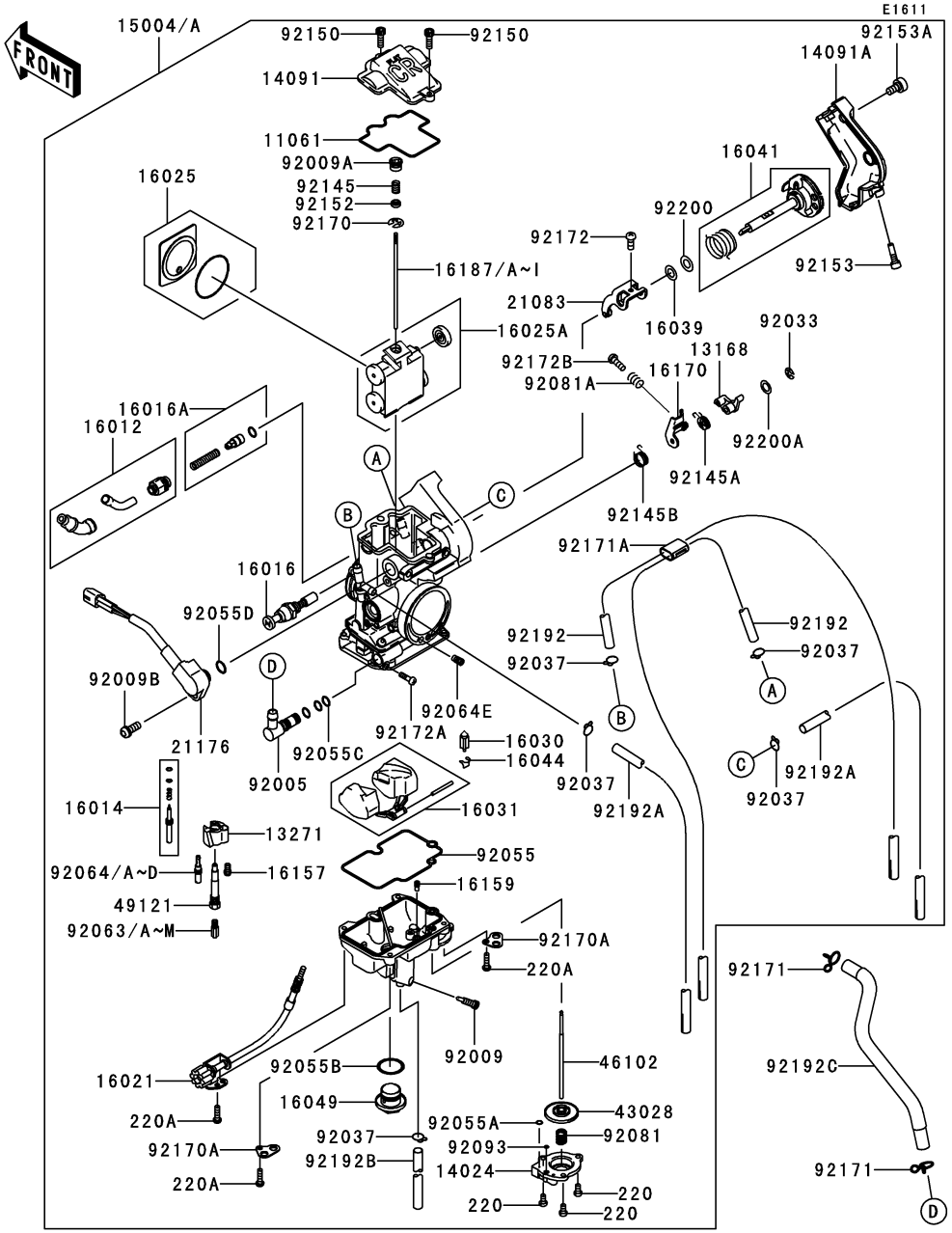

Ref. No.	Part No.	Description	Spec Code	Quantity-KX250 '07	T7F
11061	11061-0077	GASKET		1	
13168	13168-0051	LEVER		1	
13271	13271-0241	PLATE		1	
14024	14024-1971	COVER		1	
14091	14091-0208	COVER,TOP		1	
14091A	14091-0209	COVER		1	
15004	15004-0010	CARBURETOR-ASSY,FCR-37			
	L- -		AS	1	
15004A	15004-0013	CARBURETOR-ASSY,FCR-37			
	L- -		EU	1	
16012	16012-0002	CAP-STARTER PLUNGER		1	
16014	16014-0004	SCREW-PILOT AIR		1	
16016	16016-0009	PLUNGER		1	
16016A	16016-0017	PLUNGER		1	
16021	16021-0005	SCREW-THROTTLE STOP		1	
16025	16025-0009	VALVE-THROTTLE		1	
16025A	16025-0013	VALVE-THROTTLE		1	
16030	16030-1057	VALVE-FLOAT		1	
16031	16031-1100	FLOAT		1	
16039	16039-0230	WASHER		1	
16041	16041-0004	SHAFT-CARBURETOR		1	
16044	16044-007	CLAMP,FLOAT VALVE		1	
16049	16049-1051	COVER-MAIN JET		1	
16157	16157-0001	JET-STARTER,#68		1	
16159	16159-1054	JET-POWER,#55		1	
16170	16170-0003	LINK-ASSY		1	
16187	16187-0238 (OPTION)	NEEDLE-JET,NHJR		AR	
16187A	16187-0239 (OPTION)	NEEDLE-JET,NHJS		AR	
16187B	16187-0240	NEEDLE-JET,NHJT		1	
16187C	16187-0241 (OPTION)	NEEDLE-JET,NHJU		AR	
16187D	16187-0242 (OPTION)	NEEDLE-JET,NHJV		AR	
16187E	16187-0262 (OPTION)	NEEDLE-JET,NHKR		AR	
16187F	16187-0263 (OPTION)	NEEDLE-JET,NHKS		AR	
16187G	16187-0264 (OPTION)	NEEDLE-JET,NHKT		AR	

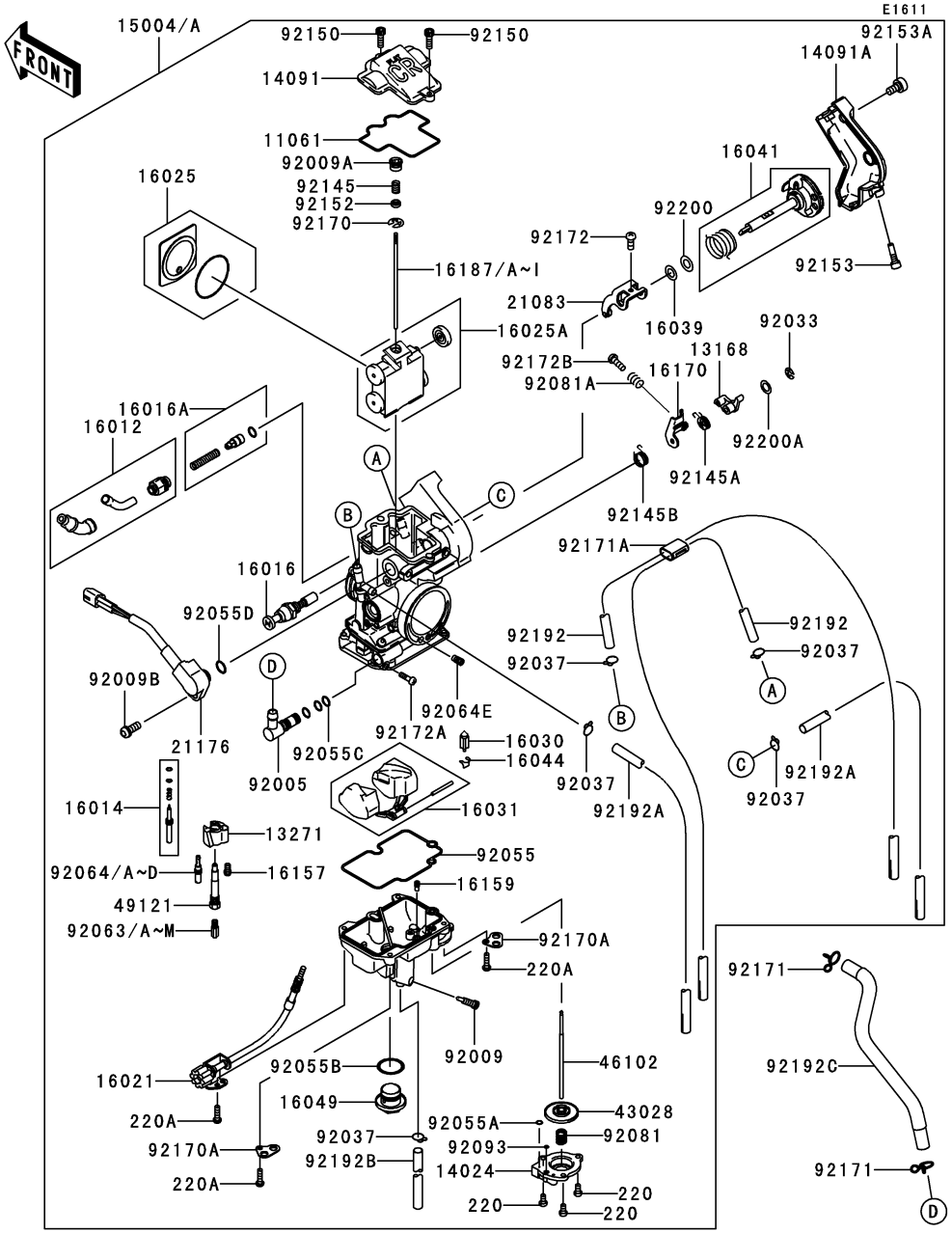

Ref. No.	Part No.	Description	Spec Code	Quantity-KX250 '07	T7F
16187H	16187-0265 (OPTION)	NEEDLE-JET,NHKU		AR	
16187I	16187-0266 (OPTION)	NEEDLE-JET,NHKV		AR	
21083	21083-0035	ARM		1	
21176	21176-0016	SENSOR,THROTTLE		1	
43028	43028-0001	DIAPHRAGM		1	
46102	46102-0033	ROD		1	
49121	49121-0001	NOZZLE-MAIN		1	
92005	92005-0016	FITTING		1	
92009	92009-1551	SCREW,DRAIN,6X0.75		1	
92009A	92009-1876	SCREW		1	
92009B	92009-1981	SCREW,THROTTLE SENSOR		1	
92033	92033-0018	RING-SNAP		1	
92037	92037-1396	CLAMP,TUBE		5	
92055	92055-0066	RING-O,FLOAT CHAMBER		1	
92055A	92055-1004	RING-O		1	
92055B	92055-1167	RING-O,MAIN JET COVER		1	
92055C	92055-1223	RING-O		3	
92055D	92055-1671	RING-O		1	
92063	92063-1370	JET-MAIN,#165			
	L- -		EU	AR	
	(OPTION)				
92063A	92063-1371	JET-MAIN,#168			
	L- -		EU	AR	
	(OPTION)				
92063B	92063-1372	JET-MAIN,#170			
	L- -		EU	AR	
	(OPTION)				
92063C	92063-1373	JET-MAIN,#172		AR	
	(OPTION)				
92063D	92063-1374	JET-MAIN,#175			
	L- -		EU	1	
92063E	92063-1374	JET-MAIN,#175			
	L- -		AS	AR	
	(OPTION)				
92063F	92063-1375	JET-MAIN,#178		AR	
	(OPTION)				
92063G	92063-1376	JET-MAIN,#180		AR	
	(OPTION)				
92063H	92063-1377	JET-MAIN,#182			
	L- -		AS	1	

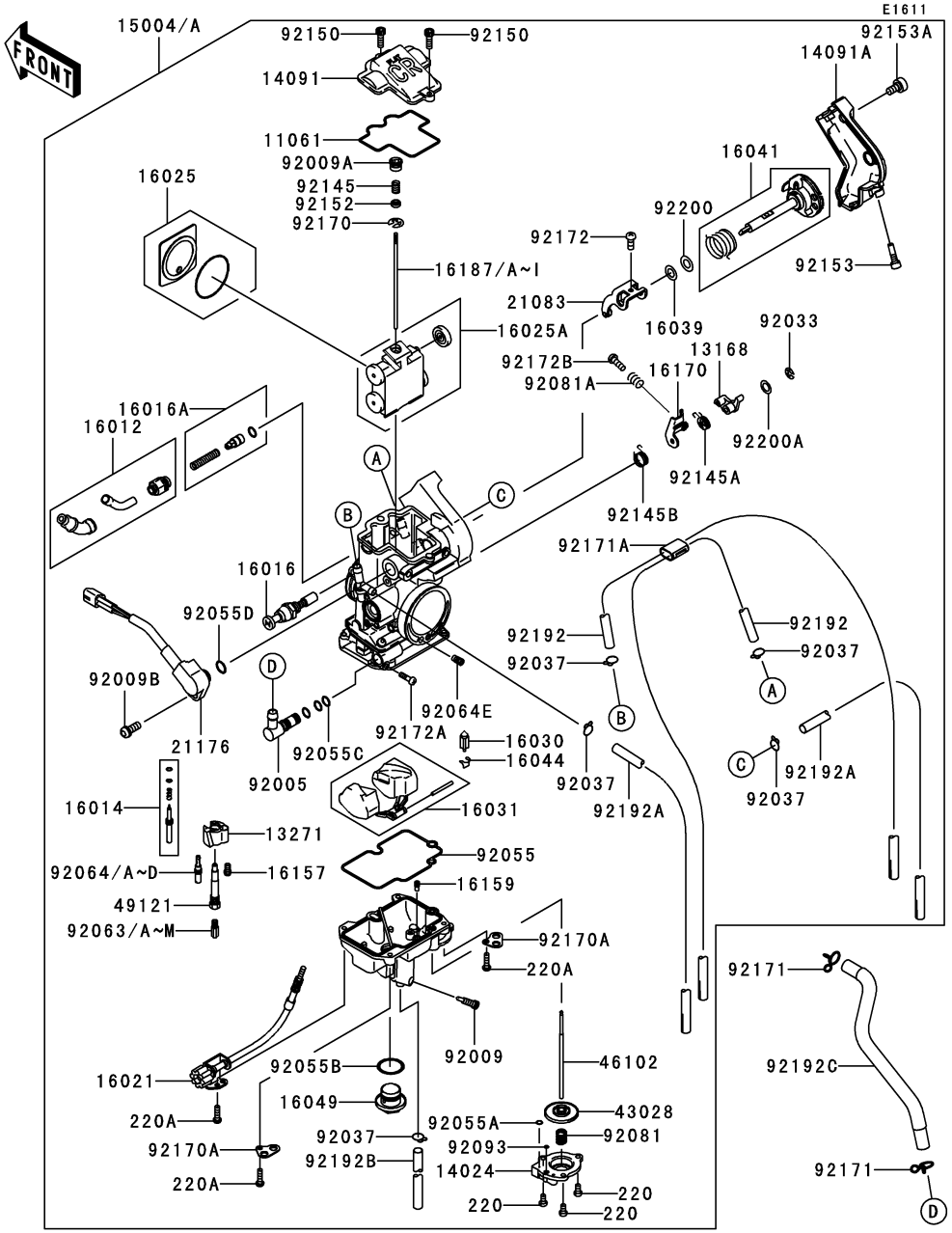

Ref. No.	Part No.	Description	Spec Code	Quantity-KX250 '07	T7F
92063I	92063-1377	JET-MAIN,#182			
	L- - - -

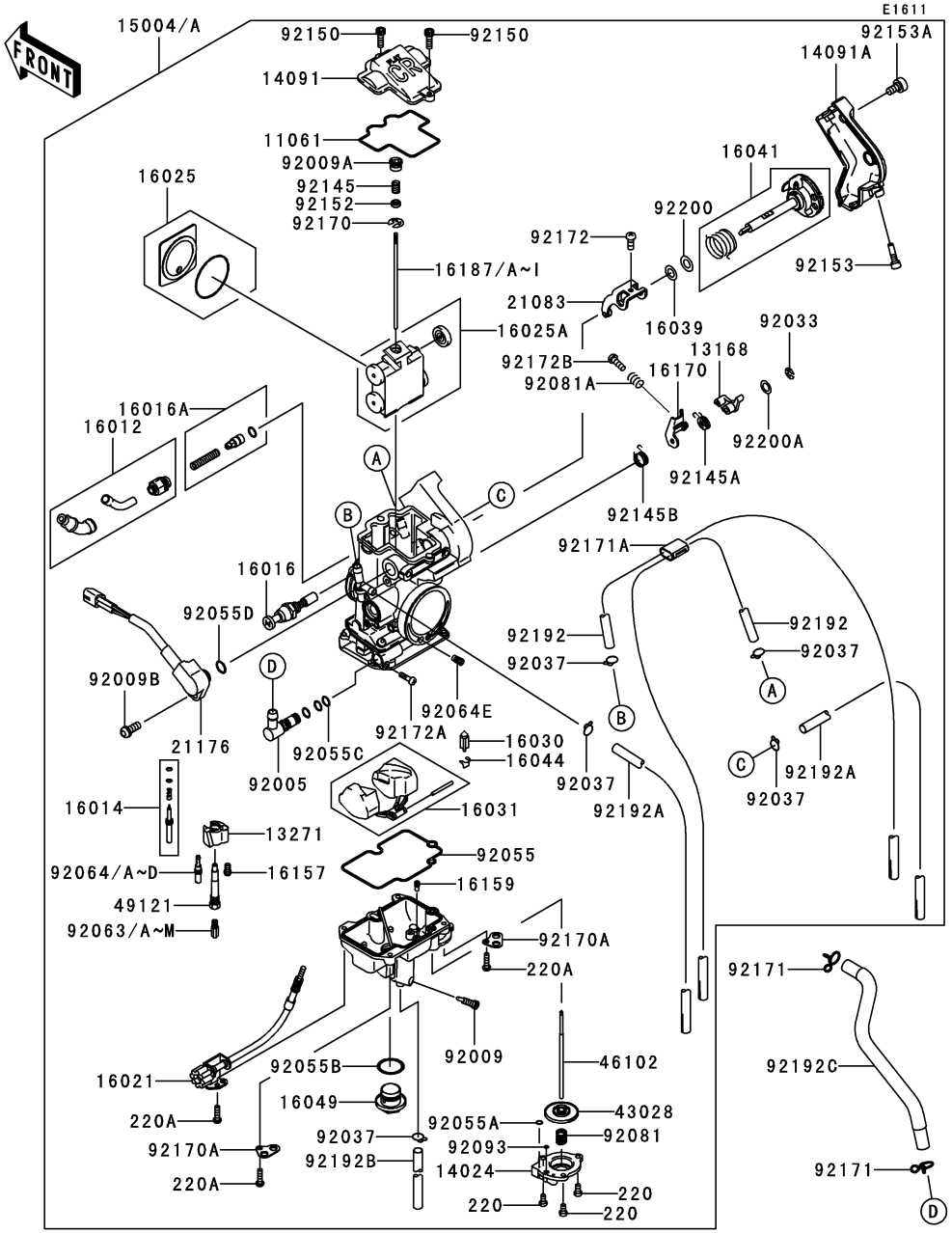

Ref. No.	Part No.	Description	Spec Code	Quantity-KX250 '07	T7F
92192A	92192-0084	TUBE		2	
92192B	92192-0085	TUBE		1	
92192C	92192-0332	TUBE,FUEL,L=235		1	
92200	92200-0107	WASHER		1	
92200A	92200-1434	WASHER,LINK ARM,STAINLESS		1	
220	220D0408	SCREW-PAN-CROS,4X8		3	
220A	220D0414	SCREW-PAN-CROS,4X14		4	

E1710

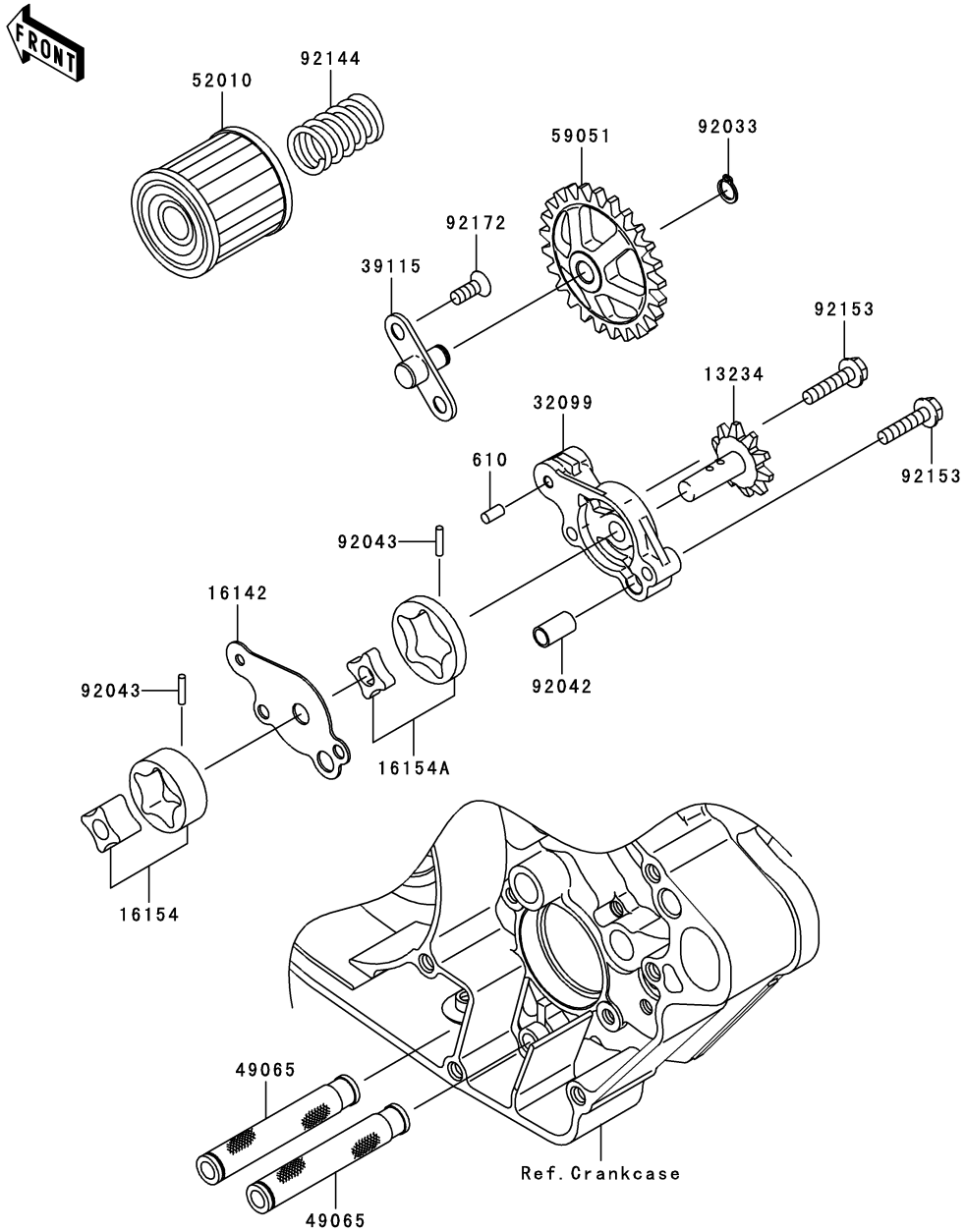

Ref. No.	Part No.	Description	Spec Code	Quantity-KX250 '07				
				T7F				
13234	13234-0005	SHAFT-COMP,OIL PUMP		1				
16142	16142-0003	COVER-PUMP		1				
16154	16154-0063	ROTOR-PUMP,SCAVENGE		1				
16154A	16154-0066	ROTOR-PUMP,FEED		1				
32099	32099-0018	CASE,OIL PUMP		1				
39115	39115-0007	SHAFT-IDLER,OIL PUMP		1				
49065	49065-0017	FILTER-OIL		2				
52010	52010-0001	ELEMENT-OIL FILTER		1				
59051	59051-0009	GEAR-SPUR,PUMP IDLER		1				
92033	92033-1039	RING-SNAP,8MM		1				
92042	92042-007	PIN,DOWEL,6.3X8X14		1				
92043	92043-0018	PIN,2.5X11.8		2				
92144	92144-1761	SPRING		1				
92153	92153-0749	BOLT,5X22		2				
92172	92172-0087	SCREW,6X14		2				
610	610A0408	ROLLER,4X8		1				

E1810

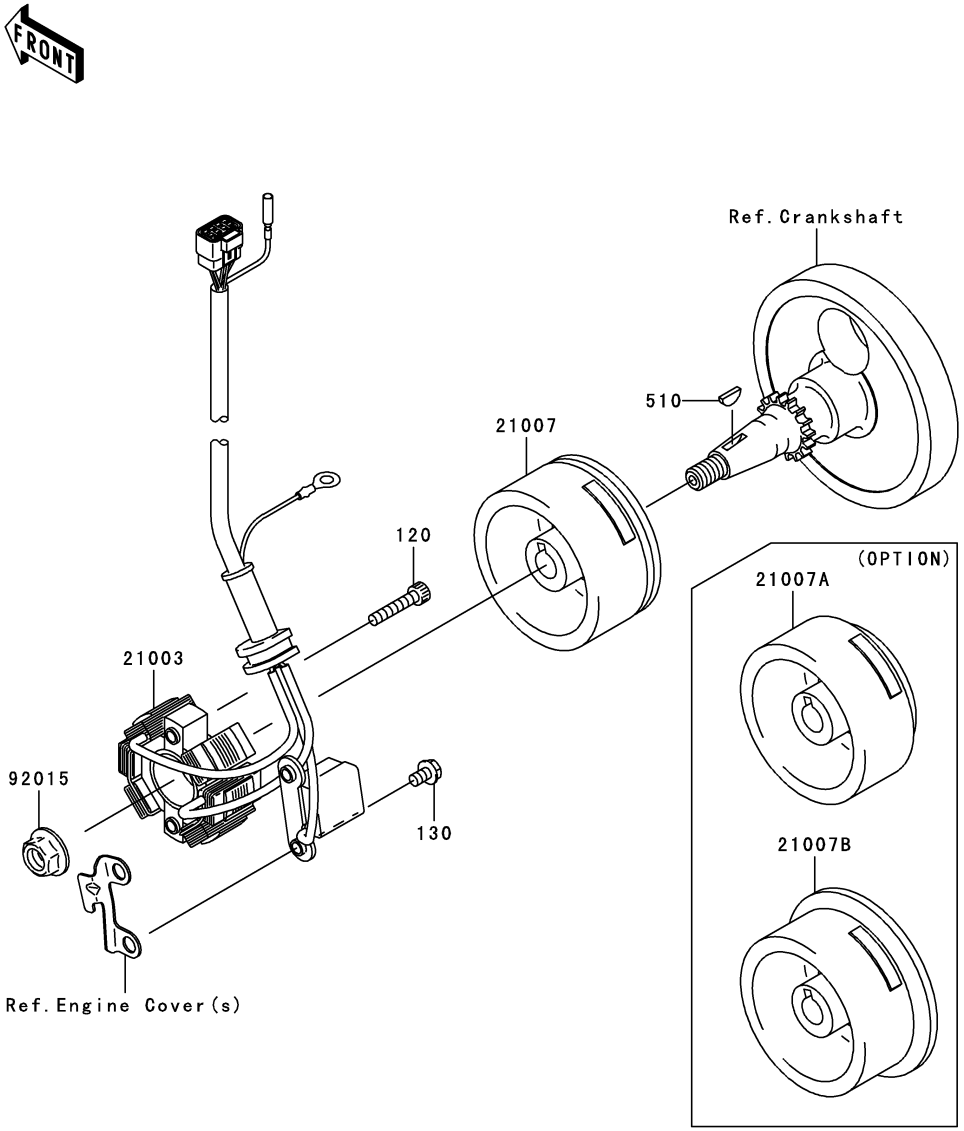

Ref. No.	Part No.	Description	Spec Code	Quantity-KX250 '07				
				T7F				
21003	21003-0048	STATOR		1				
21007	21007-0070	ROTOR,I=4.1		1				
21007A	21007-0071 (OPTION)	ROTOR,I=3.6		1				
21007B	21007-0072 (OPTION)	ROTOR,I=4.8		1				
92015	92015-1366	NUT,FLANGED,10MM		1				
120	120P0525	BOLT-SOCKET,5X25		2				
130	130G0510	BOLT-FLANGED,5X10		2				
510	510A3200	KEY-WOODRUFF		1				

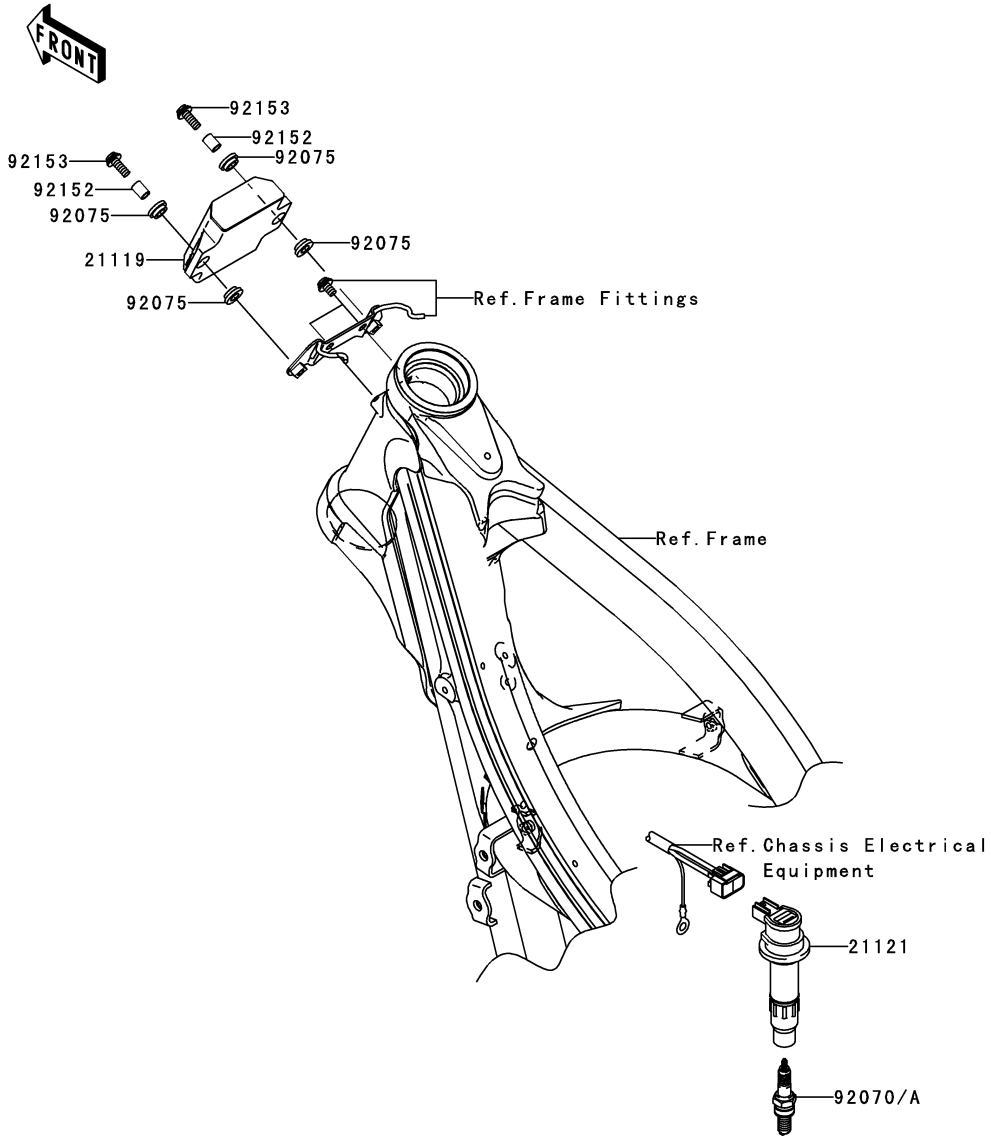

E1830

Ref. No.	Part No.	Description	Spec Code	Quantity-KX250 ’07				
				T7F				
21119	21119-0083	IGNITER		1				
21121	21121-0021	COIL-IGNITION		1				
92070	92070-0019	PLUG-SPARK,CR8E(NGK)		1				
92070A	92070-1266 (OPTION)	PLUG-SPARK,CR9E(NGK)		AR				
92075	92075-1138	DAMPER,8MM		4				
92152	92152-0261	COLLAR,6.5X8.5X11.5		2				
92153	92153-0626	BOLT,6X20		2				

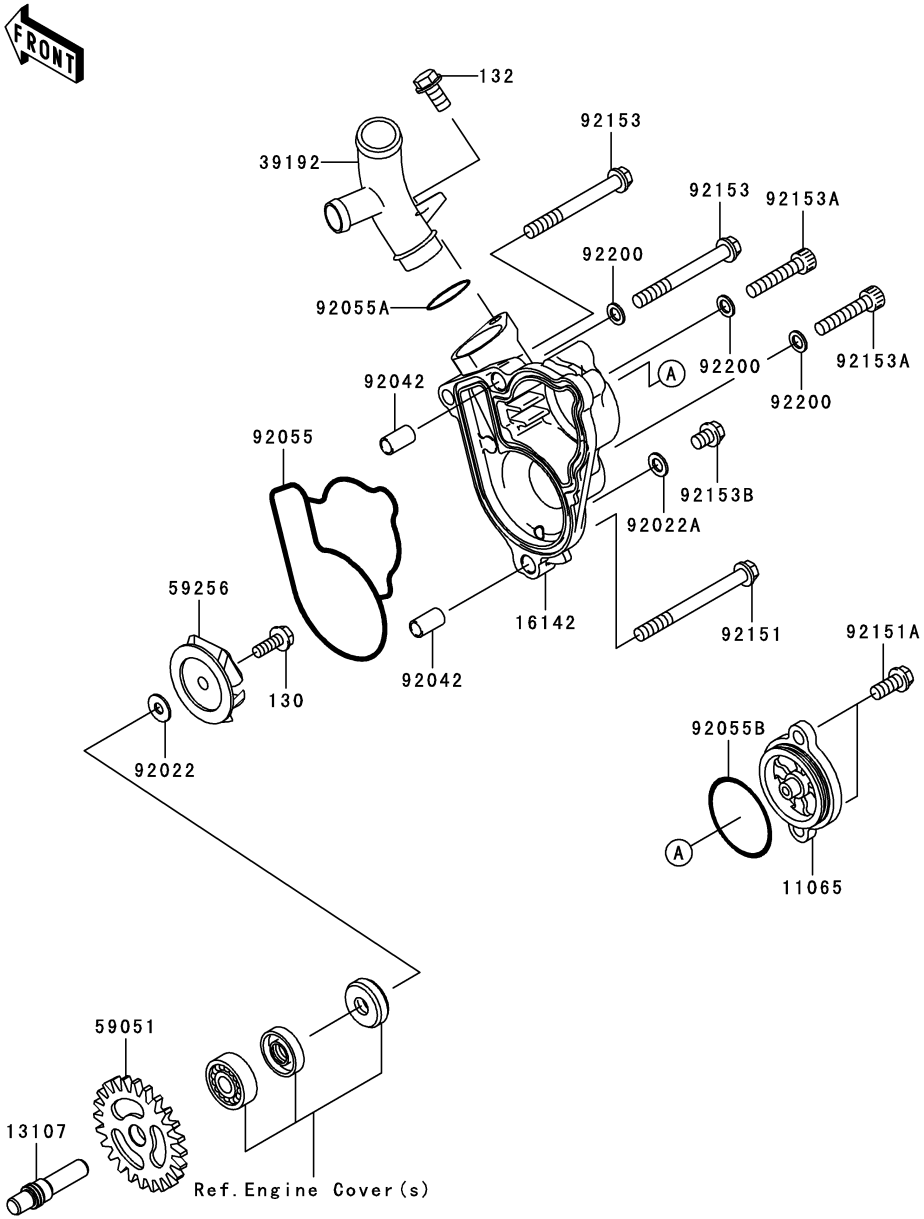

Ref. No.	Part No.	Description	Spec Code	Quantity-KX250 ’07				
				T7F				
11065	11065-0087	CAP		1				
13107	13107-0130	SHAFT,WATER PUMP		1				
16142	16142-0020	COVER-PUMP,WATER		1				
39192	39192-0037	PIPE-WATER		1				
59051	59051-0061	GEAR-SPUR,WATER PUMP		1				
59256	59256-1065	IMPELLER		1				
92022	92022-1380	WASHER,5.2X13X1		1				
92022A	92022-304	WASHER,6.2X11X1		1				
92042	92042-007	PIN,DOWEL,6.3X8X14		2				
92055	92055-0010	RING-O,WATER PUMP		1				
92055A	92055-1308	RING-O,18.8X2.4		1				
92055B	92055-520	RING-O,35.2X1.9		1				
92151	92151-1199	BOLT,6X65		1				
92151A	92151-1423	BOLT,6X14		2				
92153	92153-0696	BOLT,6X55		2				
92153A	92153-0844	BOLT,6X30		2				
92153B	92153-0860	BOLT,6X8		1				
92200	92200-0190	WASHER,6.1X10.0X1.0		3				
130	130Z0514	BOLT-FLANGED,5X14		1				
132	132L0612	BOLT-FLANGED-SMALL,6X12		1				

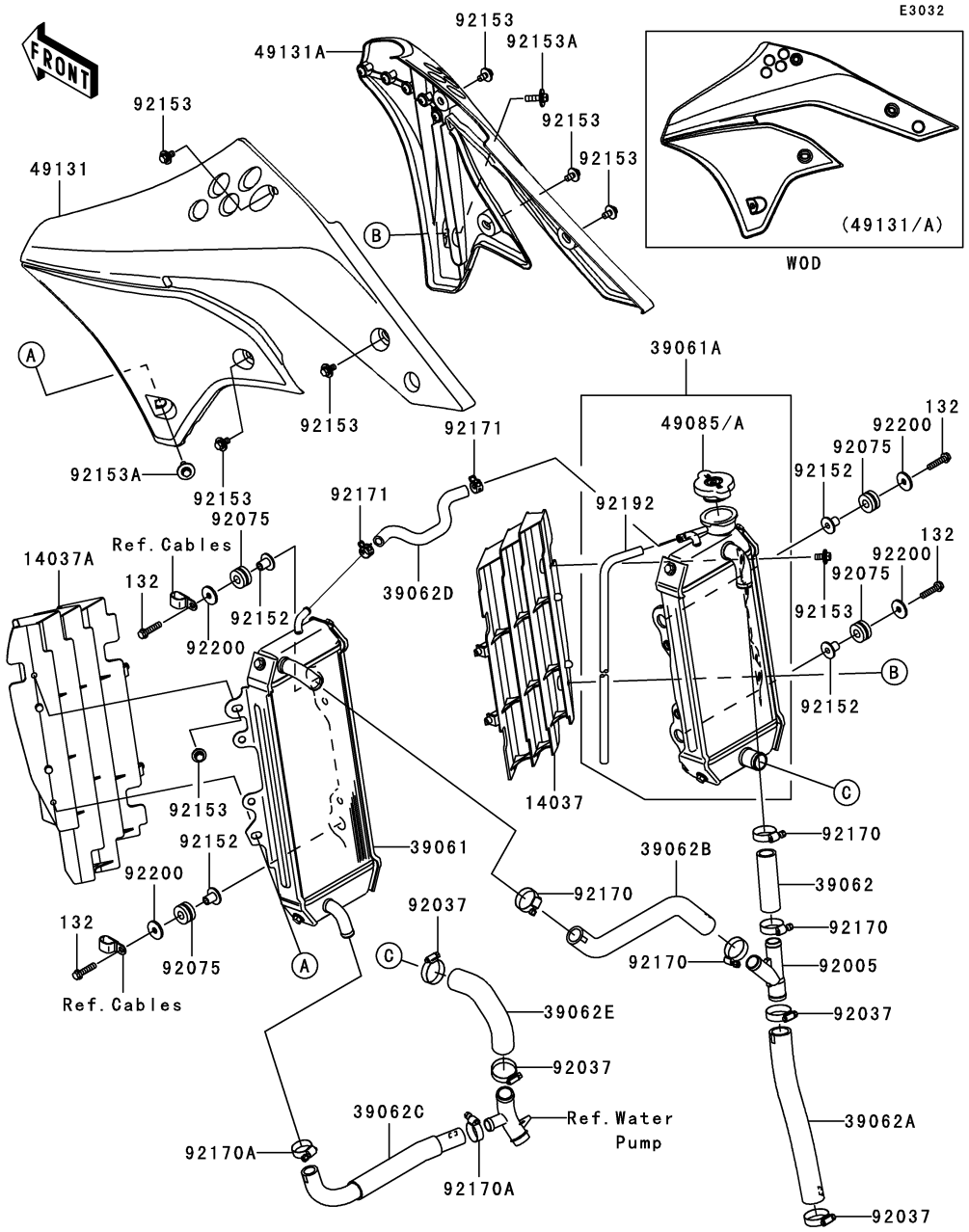

Ref. No.	Part No.	Description	Spec Code	Quantity-KX250 '07				
				T7F				
14037	14037-0058-RZ	SCREEN,RH,WHITE		1				
14037A	14037-0063-RZ	SCREEN,LH,WHITE		1				
39061	39061-0054	RADIATOR-ASSY,LH		1				
39061A	39061-0074	RADIATOR-ASSY,RH		1				
39062	39062-0091	HOSE-COOLING		1				
39062A	39062-0126	HOSE-COOLING,HEAD-FIT		1				
39062B	39062-0127	HOSE-COOLING,RAD LH-FIT		1				
39062C	39062-0129	HOSE-COOLING,RAD LH-W/P		1				
39062D	39062-0130	HOSE-COOLING,RAD LH-RAD RH		1				
39062E	39062-0153	HOSE-COOLING,RAD RH-W/P		1				
49085	49085-1070	CAP-ASSY-PRESSURE,P1.1		1				
49085A	49085-1073 (OPTION)	CAP-ASSY-PRESSURE,P1.6		1				
49131	49131-5095	SHROUD-ENGINE,LH		1				
49131A	49131-5096	SHROUD-ENGINE,RH		1				
92005	92005-0065	FITTING		1				
92037	92037-1589	CLAMP,COOLING HOSE		4				
92075	92075-209	DAMPER		4				
92152	92152-0379	COLLAR,L=12.6,T=1.6		4				
92153	92153-0503	BOLT,6X12		8				
92153A	92153-0864	BOLT,6X20		2				
92170	92170-1077	CLAMP,COOLING HOSE		4				
92170A	92170-1283	CLAMP		2				
92171	92171-0372	CLAMP		2				
92192	92192-0167	TUBE,6X9X640		1				
92200	92200-0271	WASHER,6.5X22X2.3		4				
132	132L0625	BOLT-FLANGED-SMALL,6X25		4				

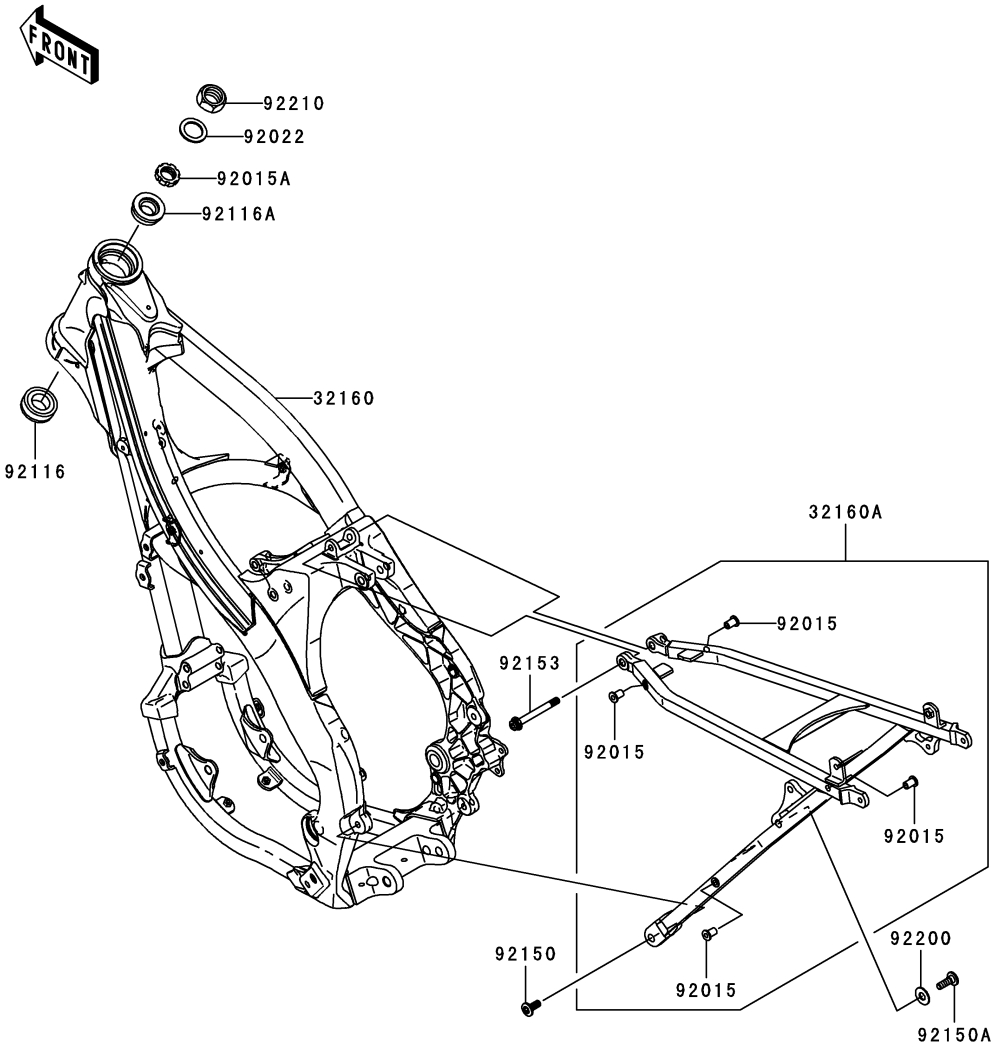

Ref. No.	Part No.	Description	Spec Code	Quantity-KX250 '07 T7F				
32160	32160-0192	FRAME-COMP,FR		1				
32160A	32160-0194	FRAME-COMP,RR		1				
92015	92015-1791	NUT,POP,6MM,L=15		4				
92015A	92015-1861	NUT,STEERING STEM,28MM		1				
92022	92022-250	WASHER,25X36X2.3		1				
92116	92116-1069	BEARING-ROLLER,HI-CAP32006JRRS		1				
92116A	92116-1076	BEARING-ROLLER,HI-CAP320/28JRR		1				
92150	92150-1760	BOLT,SOCKET,8X20		1				
92150A	92150-1845	BOLT,8X25		1				
92153	92153-1790	BOLT,SOCKET,8X74		1				
92200	92200-0154	WASHER,10.5X24X1.5		1				
92210	92210-0066	NUT,24MM		1				

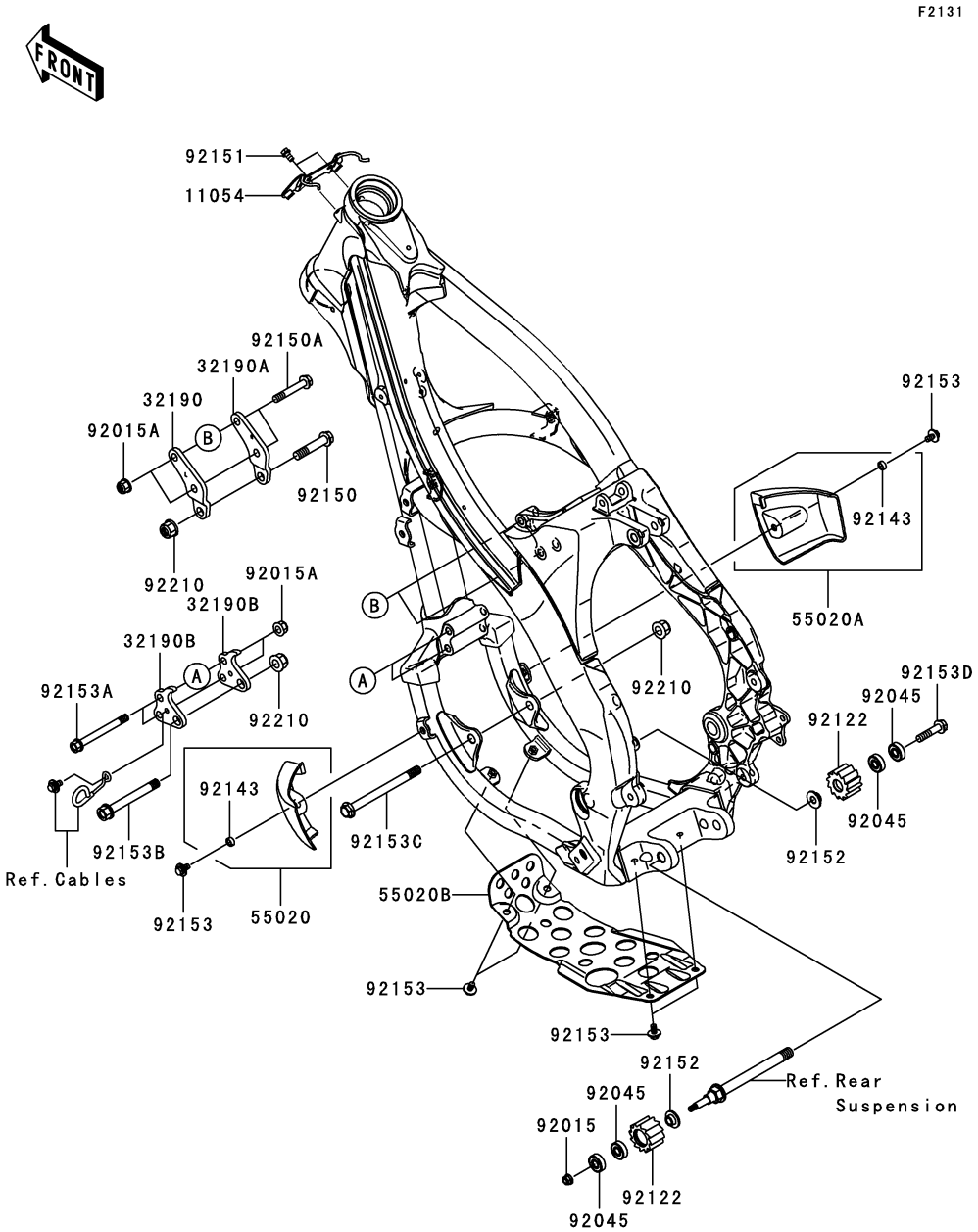

Ref. No.	Part No.	Description	Spec Code	Quantity-KX250 '07 T7F
11054	11054-0241	BRACKET,IGNITER		1
32190	32190-0172	BRACKET-ENGINE,UPP,LH		1
32190A	32190-0173	BRACKET-ENGINE,UPP,RH		1
32190B	32190-0231	BRACKET-ENGINE,FR		2
55020	55020-0175	GUARD,ENGINE,FR,LH		1
55020A	55020-0176	GUARD,ENGINE,FR,RH		1
55020B	55020-0257	GUARD,ENGINE,LWR		1
92015	92015-1339	NUT,LOCK,FLANGED,6MM		1
92015A	92015-1432	NUT,8MM		4
92045	92045-0060	BEARING-BALL,608LLU/2A		4
92122	92122-0016	ROLLER,CHAIN GUIDE		2
92143	92143-1307	COLLAR		2
92150	92150-1170	BOLT,FLANGED,10X49		1
92150A	92150-1214	BOLT,FLANGED,8X50		2
92151	92151-1233	BOLT,FLANGED,6X10		2
92152	92152-0459	COLLAR		2
92153	92153-0503	BOLT,6X12		6
92153A	92153-0994	BOLT,FLANGED,8X82		2
92153B	92153-0997	BOLT,FLANGED,10X84		1
92153C	92153-1359	BOLT,FLANGED,10X120		1
92153D	92153-1652	BOLT,FLANGED,8X35		1
92210	92210-1080	NUT,LOCK,FLANGED,10MM		3

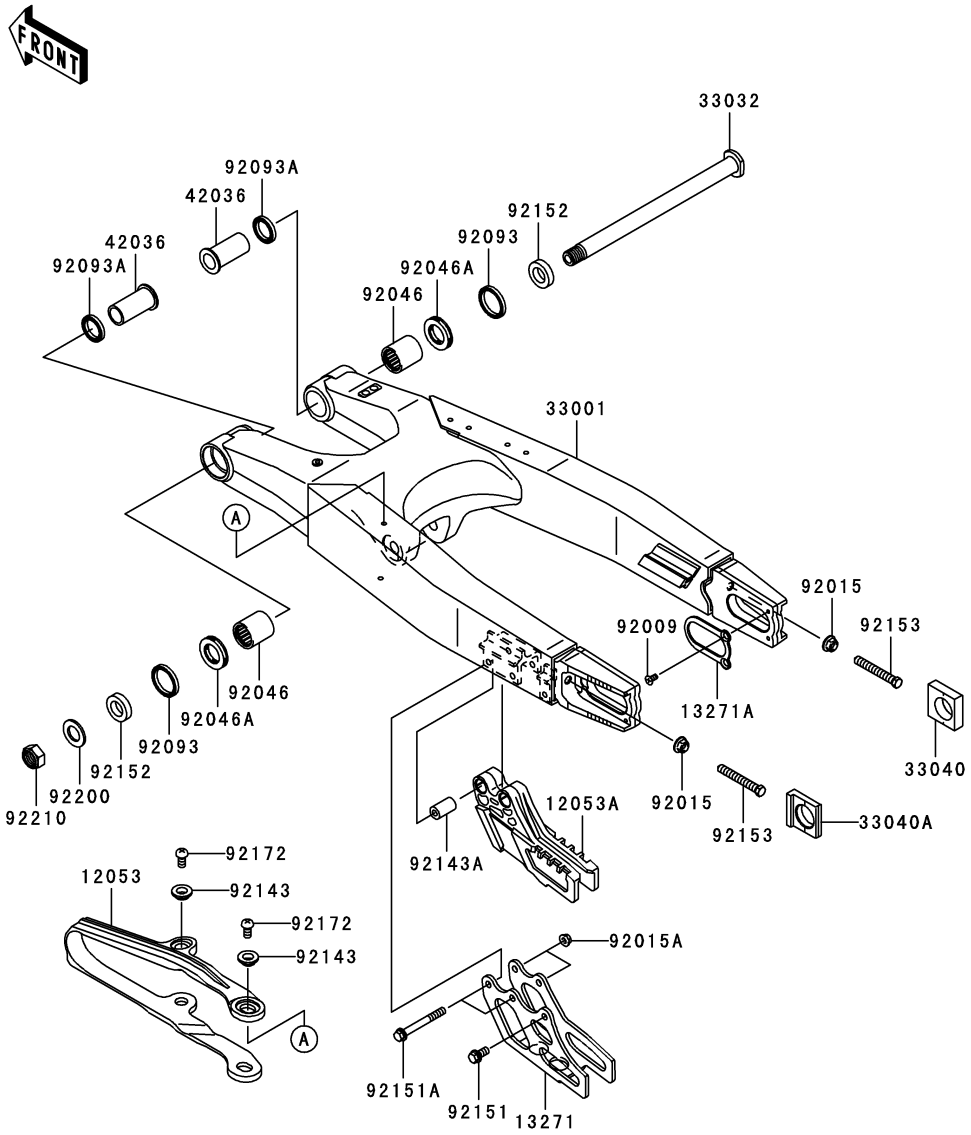

Ref. No.	Part No.	Description	Spec Code	Quantity-KX250 '07 T7F
12053	12053-0053	GUIDE-CHAIN,DRIVE,FR		1
12053A	12053-0061	GUIDE-CHAIN		1
13271	13271-0593	PLATE,CHAIN GUIDE		1
13271A	13271-1833	PLATE,AXLE		2
33001	33001-0107	ARM-COMP-SWING		1
33032	33032-0012	SHAFT-SWING ARM		1
33040	33040-0020	ADJUSTER-CHAIN,RH		1
33040A	33040-1189	ADJUSTER-CHAIN,LH		1
42036	42036-0019	SLEEVE,SWING ARM,L=47.5		2
92009	92009-1828	SCREW,5X10		4
92015	92015-1014	NUT,FLANGED,8MM		2
92015A	92015-1078	NUT,FLANGED,6MM		2
92046	92046-1174	BEARING-NEEDLE,TA2230Z		2
92046A	92046-1240	BEARING-NEEDLE,NTBR22356E01		2
92093	92093-1434	SEAL,SDO29X35X4.5		2
92093A	92093-1435	SEAL,SDO22X29X5		2
92143	92143-1676	COLLAR		4
92143A	92143-1867	COLLAR,6.5X14X24		2
92151	92151-1133	BOLT,6X12		1
92151A	92151-1234	BOLT,6X50		2
92152	92152-0292	COLLAR,17.1X29X6		2
92153	92153-0620	BOLT,8X56		2
92172	92172-0119	SCREW,5X8		4
92200	92200-0285	WASHER,17.2X30X2.3		1
92210	92210-0285	NUT,LOCK,16MM		1

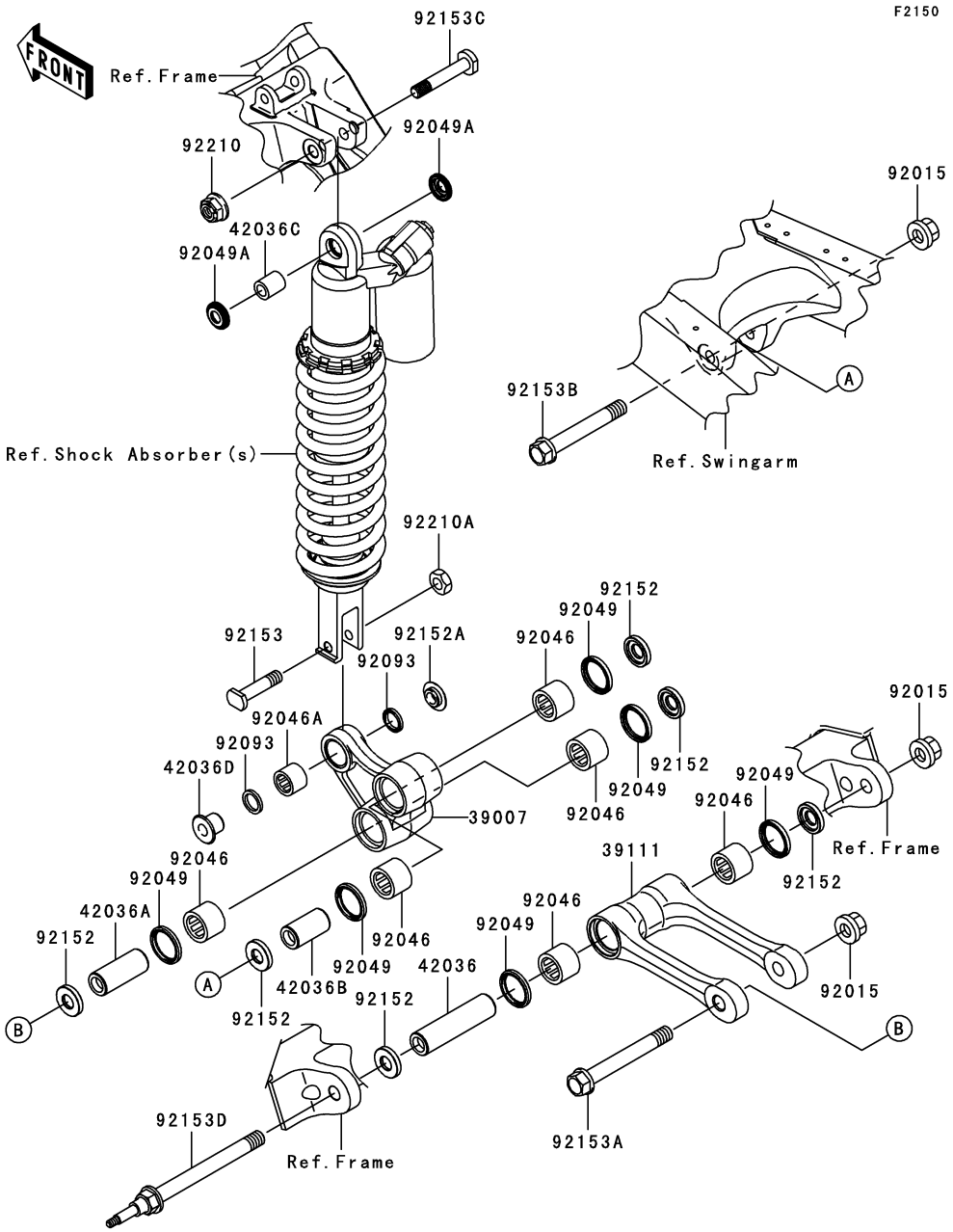

Ref. No.	Part No.	Description	Spec Code	Quantity-KX250 '07				
				T7F				
39007	39007-0057	ARM-SUSP,UNI TRAK		1				
39111	39111-0022	ROD-TIE,SUSPENSION		1				
42036	42036-0020	SLEEVE,ROD,L=78.4		1				
42036A	42036-0021	SLEEVE,SUSPENSION ARM,L=49		1				
42036B	42036-0022	SLEEVE,SUSPENSION ARM,L=37		1				
42036C	42036-0030	SLEEVE,10X16X19.3		1				
42036D	42036-1351	SLEEVE		1				
92015	92015-1433	NUT,LOCK,FLANGED,12MM		3				
92046	92046-1151	BEARING-NEEDLE,F-2016		6				
92046A	92046-1301	BEARING-NEEDLE,7E-HVS16X22X12		1				
92049	92049-0063	SEAL-OIL,SDO26X32X4		6				
92049A	92049-0069	SEAL-OIL		2				
92093	92093-1436	SEAL		2				
92152	92152-0425	COLLAR		6				
92152A	92152-1139	COLLAR		1				
92153	92153-0937	BOLT,10X45		1				
92153A	92153-0938	BOLT,FLANGED,12X95		1				
92153B	92153-0939	BOLT,FLANGED,12X86		1				
92153C	92153-1386	BOLT,10X58		1				
92153D	92153-1643	BOLT,12MM,L=122		1				
92210	92210-1080	NUT,LOCK,FLANGED,10MM		1				
92210A	92210-1184	NUT,LOCK,10MM		1				

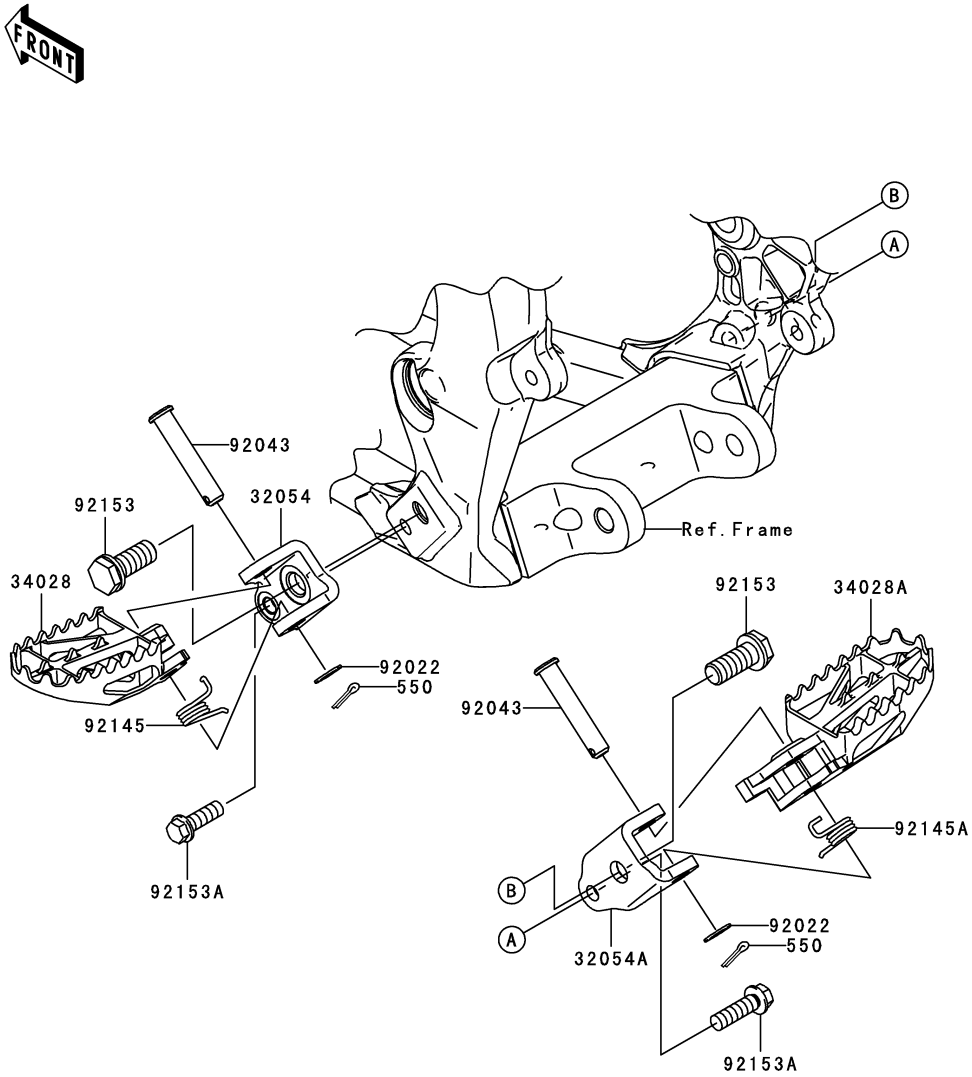

Ref. No.	Part No.	Description	Spec Code	Quantity-KX250 ’07				
				T7F				
32054	32054-0020	BRACKET-STEP,LH		1				
32054A	32054-0021	BRACKET-STEP,RH		1				
34028	34028-0014	STEP,LH		1				
34028A	34028-0015	STEP,RH		1				
92022	92022-1829	WASHER,10.2X16X1		2				
92043	92043-0074	PIN,10X42.5		2				
92145	92145-0198	SPRING,STEP,LH		1				
92145A	92145-0199	SPRING,STEP,RH		1				
92153	92153-0653	BOLT,FLANGED,12X23		2				
92153A	92153-0838	BOLT,FLANGED,8X25		2				
550	550S3020	PIN-COTTER,3.0X20		2				

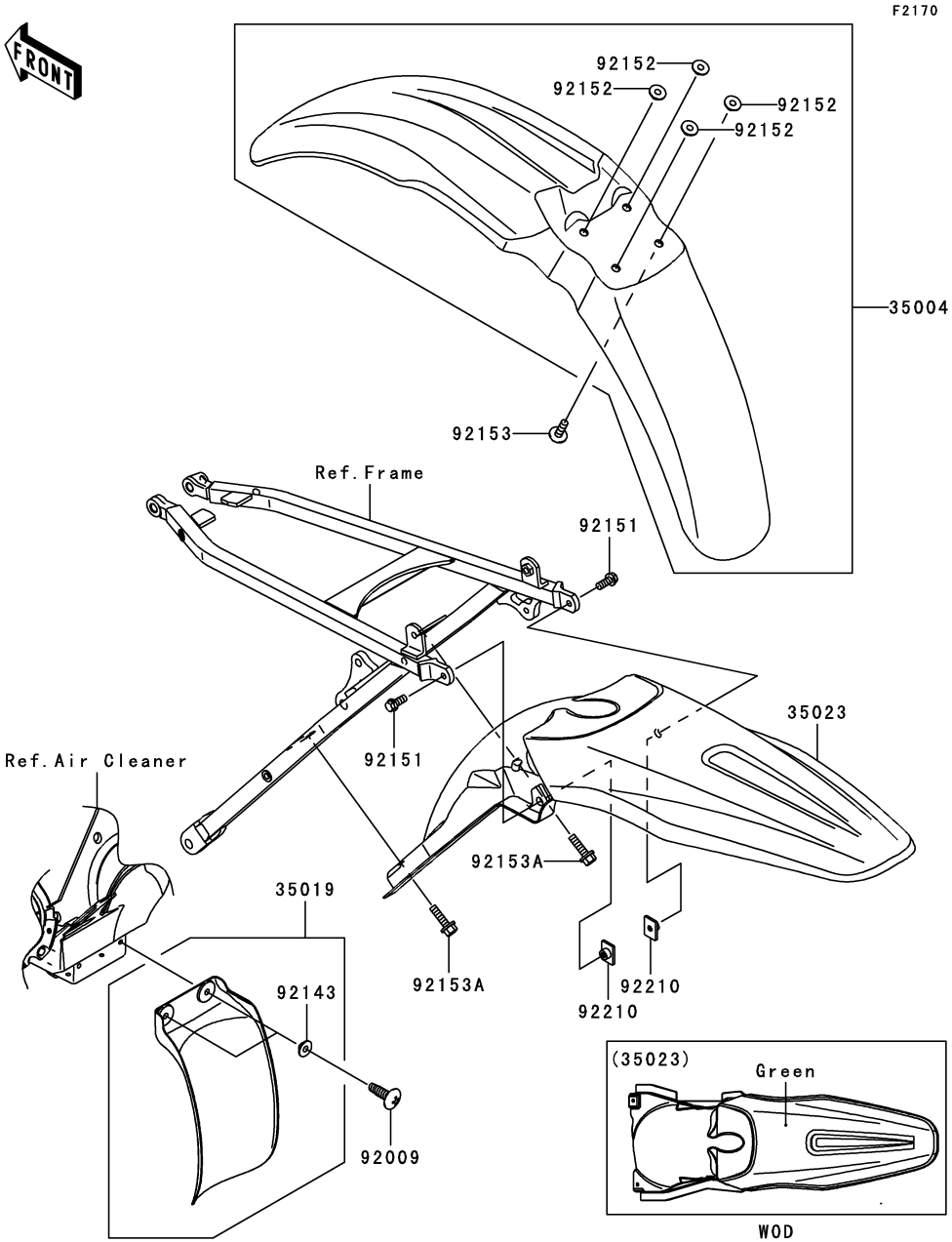

Ref. No.	Part No.	Description	Spec Code	Quantity-KX250 '07				
				T7F				
35004	35004-0078-290	FENDER-FRONT,L.GREEN		1				
35019	35019-0050	FLAP,AIR FILTER		1				
35023	35023-0100-290	FENDER-REAR,L.GREEN		1				
92009	92009-1993	SCREW,TAPPING,5X20		2				
92143	92143-1087	COLLAR		2				
92151	92151-1423	BOLT,6X14		2				
92152	92152-1422	COLLAR		4				
92153	92153-0502	BOLT,6X20		4				
92153A	92153-0950	BOLT,FLANGED,6X22		2				
92210	92210-1352	NUT,PLATE,6MM		2				

F2190

Ref. No.	Part No.	Description	Spec Code	Quantity-KX250				
				’07				
				T7F				
34024	34024-1396-458	STAND-SIDE,P.SILVER		1				

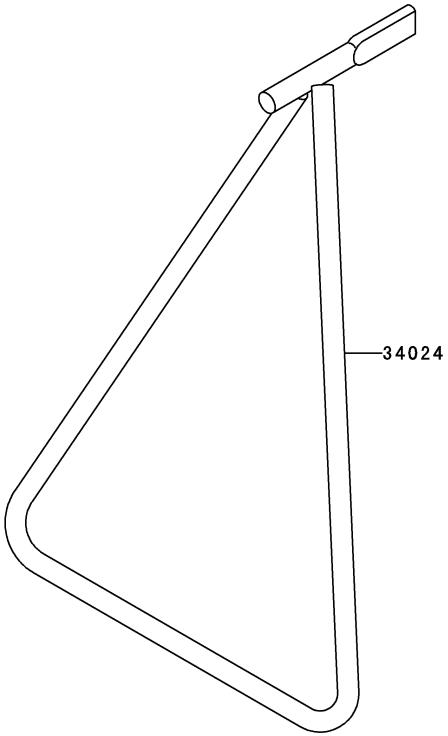

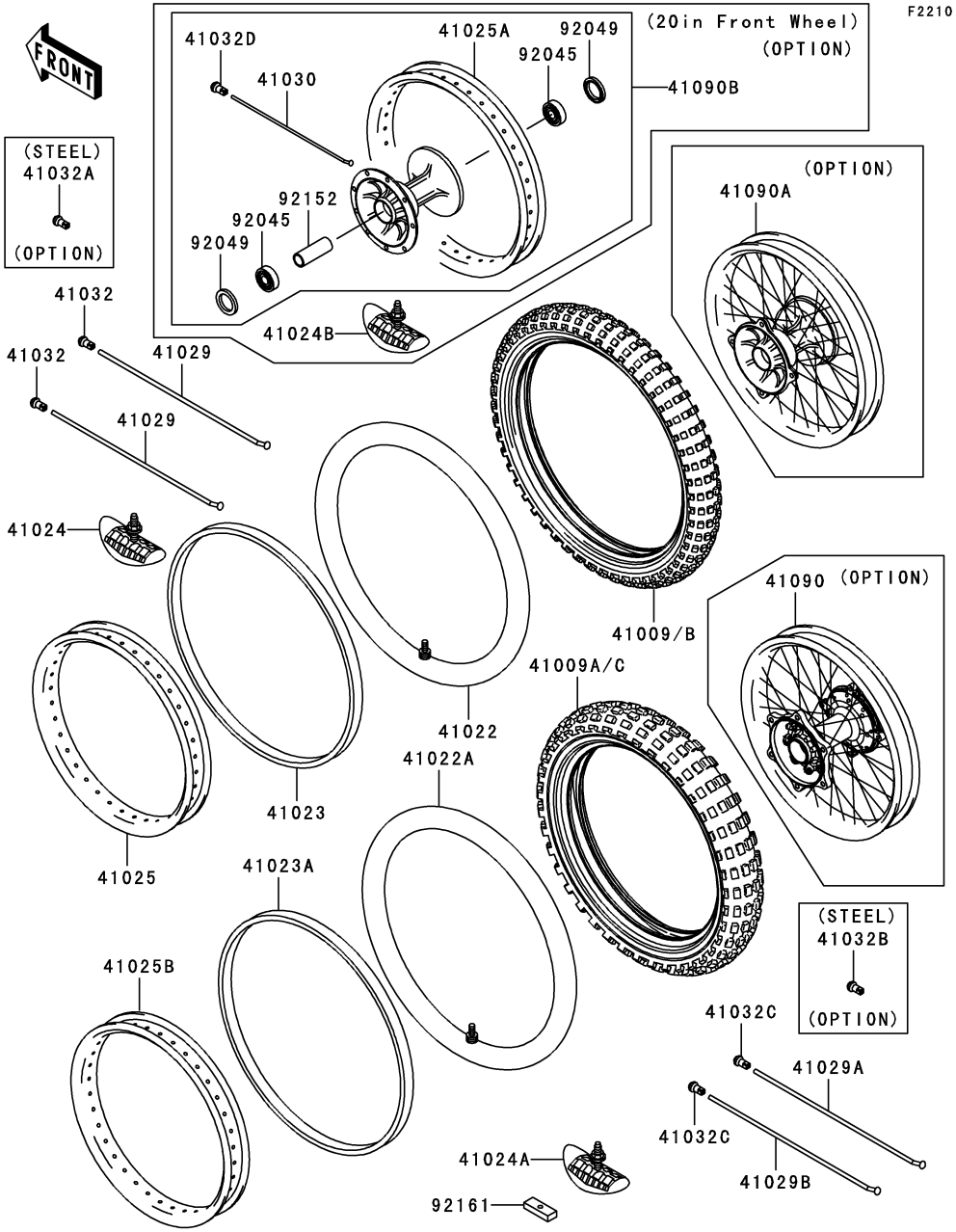

Ref. No.	Part No.	Description	Spec Code	Quantity-KX250 '07	T7F
41009	41009-0035	TIRE,FR,80/100-21 51M,M201(BS)			
	L- - - -

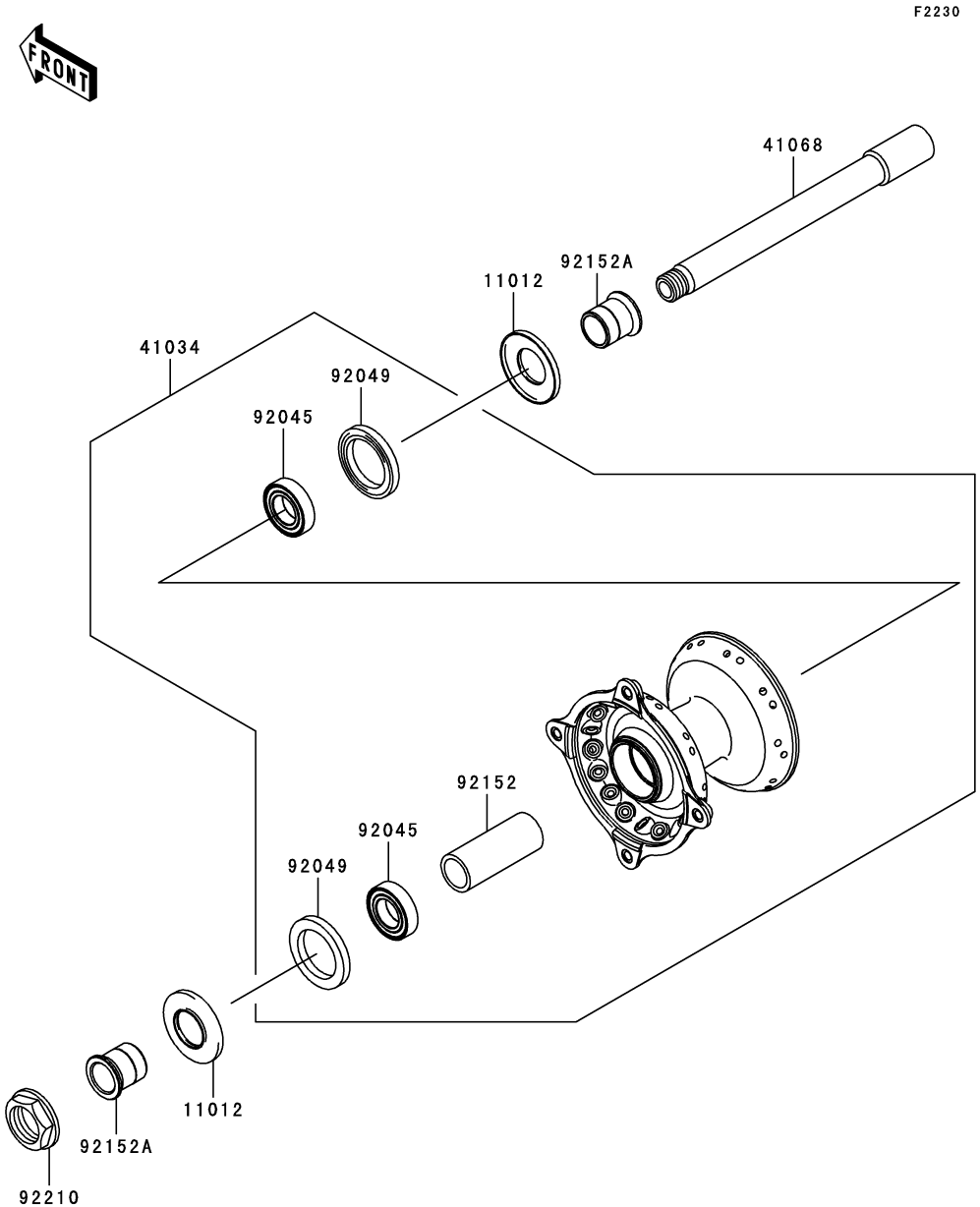

Ref. No.	Part No.	Description	Spec Code	Quantity-KX250 '07 T7F
11012	11012-1581	CAP,AXLE		2
41034	41034-0037-10Y	DRUM-ASSY,FRONT BRAKE,M.M.GOLD		1
41068	41068-0004	AXLE,FR		1
92045	92045-1284	BEARING-BALL,69042RS		2
92049	92049-1403	SEAL-OIL,BJNC-2 25X37X5		2
92152	92152-0028	COLLAR,FRONT BRAKE DRUM,L=65		1
92152A	92152-0324	COLLAR,FR AXLE,L=27.5		2
92210	92210-0065	NUT,18MM		1

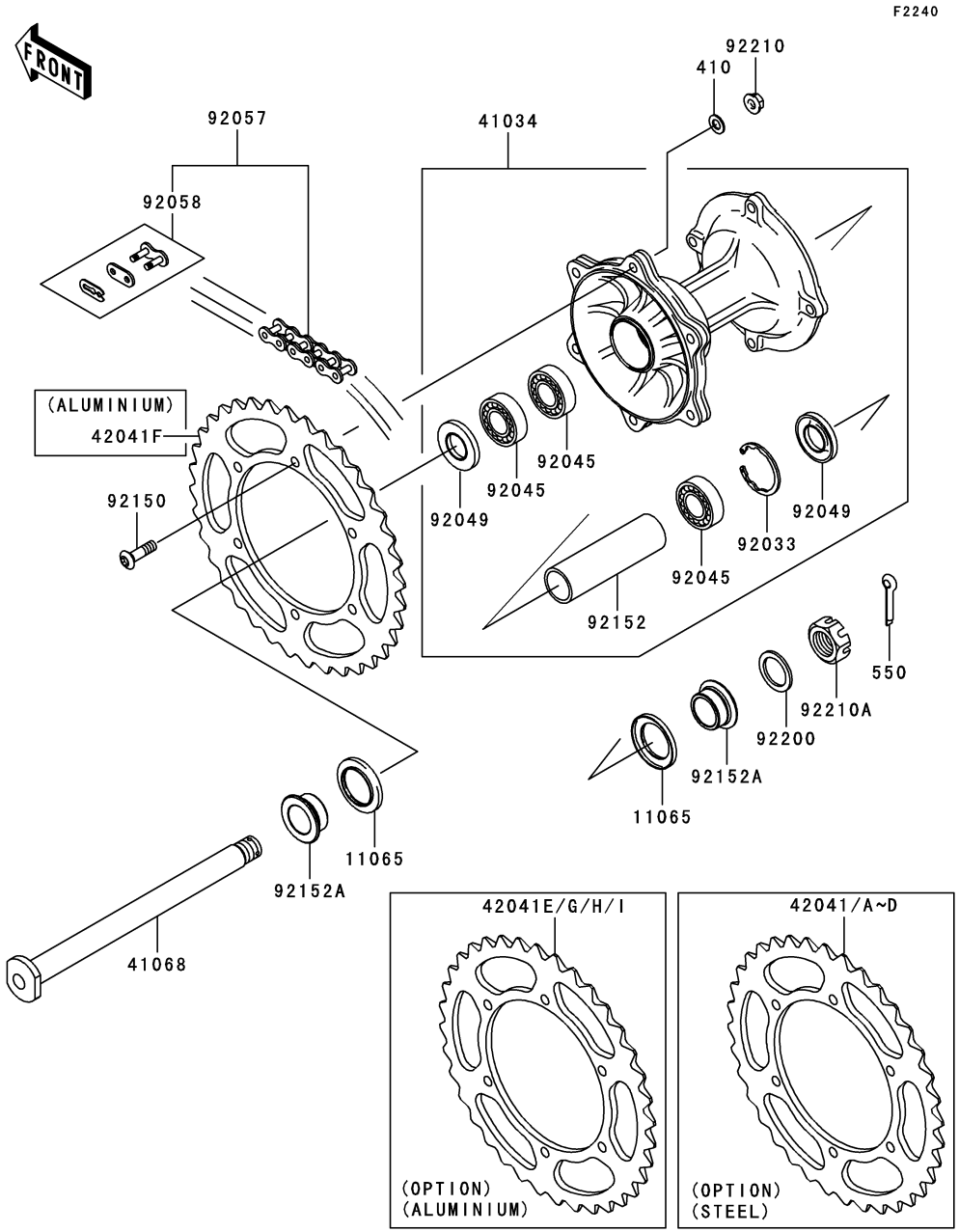

Ref. No.	Part No.	Description	Spec Code	Quantity-KX250 '07	T7F
11065	11065-1253	CAP,AXLE		2	
41034	41034-0035-10Y	DRUM-ASSY,REAR BRAKE,M.M.GOLD		1	
41068	41068-1466	AXLE,RR		1	
42041	42041-1381 (OPTION)	SPROCKET-HUB,46T		1	
42041A	42041-1382 (OPTION)	SPROCKET-HUB,47T		1	
42041B	42041-1383 (OPTION)	SPROCKET-HUB,48T		1	
42041C	42041-1384 (OPTION)	SPROCKET-HUB,49T		1	
42041D	42041-1408 (OPTION)	SPROCKET-HUB,50T		1	
42041E	42041-1447 (OPTION)	SPROCKET-HUB,47T,AL		1	
42041F	42041-1448	SPROCKET-HUB,48T,AL		1	
42041G	42041-1449 (OPTION)	SPROCKET-HUB,49T,AL		1	
42041H	42041-1450 (OPTION)	SPROCKET-HUB,50T,AL		1	
42041I	42041-1501 (OPTION)	SPROCKET-HUB,46T,AL		1	
92033	92033-1041	RING-SNAP,42MM		1	
92045	92045-1446	BEARING-BALL,69052RS		3	
92049	92049-1614	SEAL-OIL		2	
92057	92057-1540	CHAIN,DRIVE,DID520DMA2SDHX112L		1	
92058	92058-1074	JOINT-CHAIN,DRIVE		1	
92150	92150-1978	BOLT,SOCKET,8X28		6	
92152	92152-1427	COLLAR,REAR BRAKE DRUM,L=106.5		1	
92152A	92152-1473	COLLAR,RR AXLE,L=17		2	
92200	92200-1623	WASHER,22.5X35X2.3		1	
92210	92210-0159	NUT,FLANGED,LOCK,8MM		6	
92210A	92210-1411	NUT,CASTLE,22MM		1	
410	410B0800	WASHER-PLAIN-SMALL,8MM		6	
550	550D3035	PIN-COTTER,3.0X35		1	

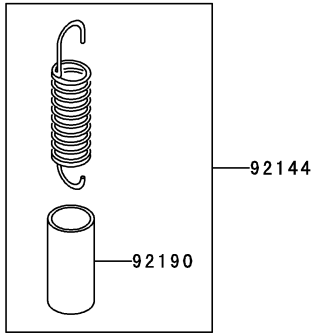

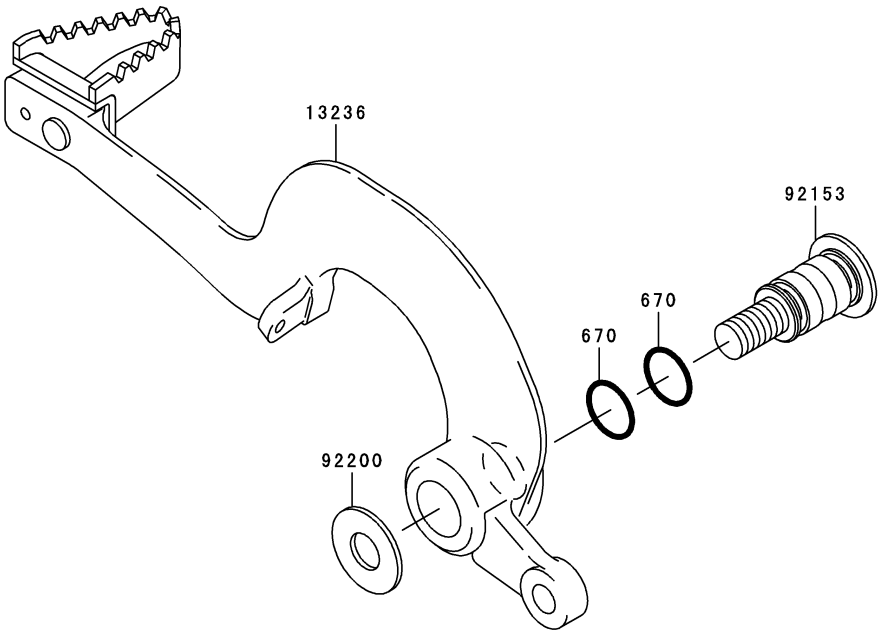

F2260

Ref. No.	Part No.	Description	Spec Code	Quantity-KX250 '07 T7F				
13236	13236-0097	LEVER-COMP,BRAKE PEDAL		1				
92144	92144-1752	SPRING,BRAKE PEDAL RETURN		1				
92153	92153-0974	BOLT,BRAKE PEDAL,10MM		1				
92190	92190-1488	TUBE,13X16X25		1				
92200	92200-0154	WASHER,10.5X24X1.5		1				
670	670B2012	O RING,12MM		2				

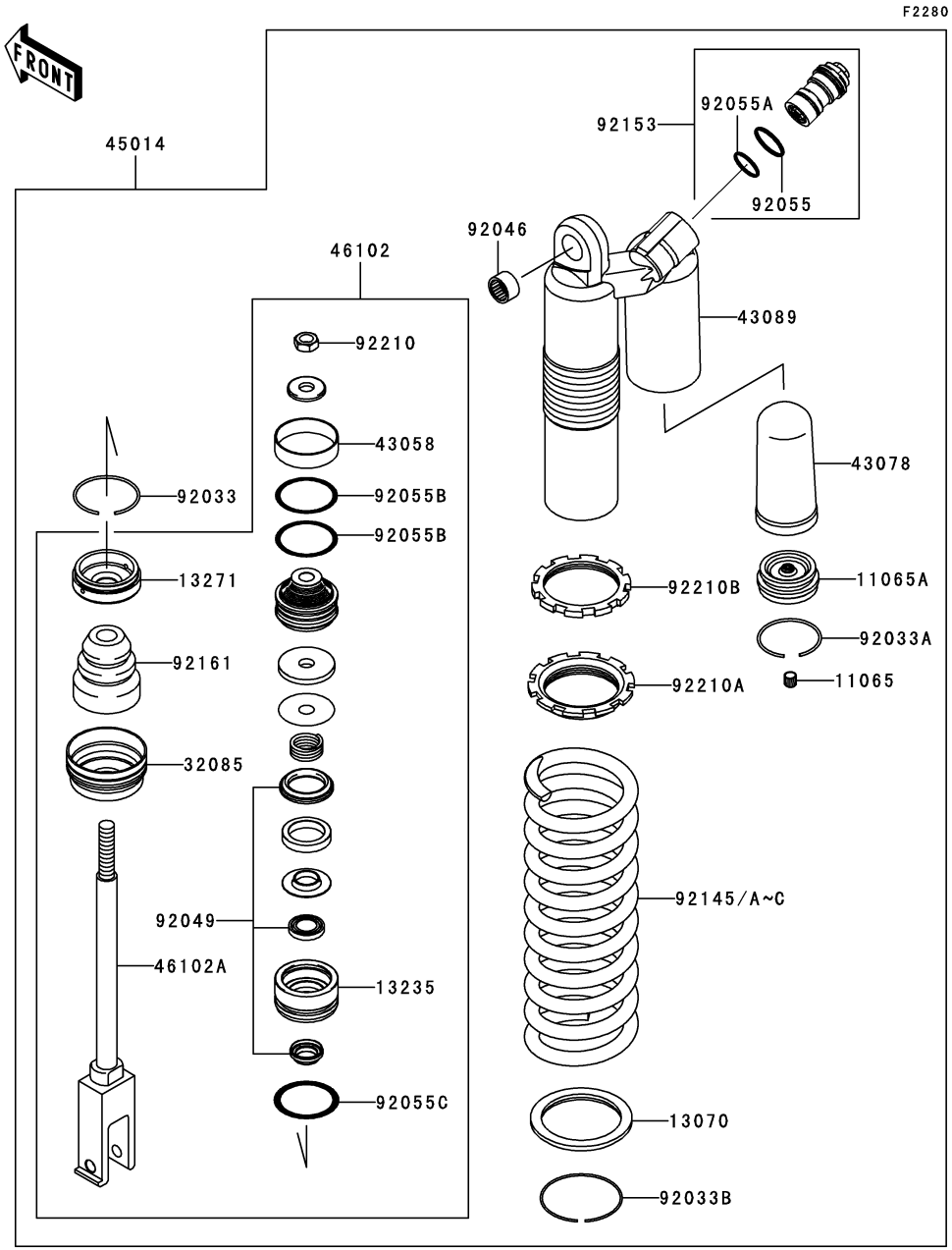

Ref. No.	Part No.	Description	Spec Code	Quantity-KX250 '07 T7F				
11065	11065-0145	CAP,AIR VALVE		1				
11065A	11065-0164	CAP,CHAMBER		1				
13070	13070-0057	GUIDE,SPRING SEAT		1				
13235	13235-0001	GUIDE-COMP,ROD		1				
13271	13271-0858	PLATE,END		1				
32085	32085-0077	STOPPER,SPRING SEAT		1				
43058	43058-0012	RING,PISTON		1				
43078	43078-0030	RESERVOIR		1				
43089	43089-0012-829	CYLINDER-SHOCKABSORBER,GOLD		1				
45014	45014-5028	SHOCKABSORBER		1				
46102	46102-0087	ROD,PISTON		1				
46102A	46102-0088	ROD		1				
92033	92033-0040	RING-SNAP		1				
92033A	92033-0041	RING-SNAP		1				
92033B	92033-0042	RING-SNAP		1				
92046	92046-1301	BEARING-NEEDLE,7E-HVS16X22X12		1				
92049	92049-0075	SEAL-OIL		1				
92055	92055-0098	RING-O,PLUG BOLT		1				
92055A	92055-0099	RING-O,PLUG BOLT		1				
92055B	92055-0100	RING-O		2				
92055C	92055-0101	RING-O		1				
92145	92145-0463-8V	SPRING,REAR SHOCK,K=51N/MM,SIL		1				
92145A	92145-0464-8V (OPTION)	SPRING,REAR SHOCK,K=47N/MM,SIL		1				
92145B	92145-0465-8V (OPTION)	SPRING,REAR SHOCK,K=49N/MM,SIL		1				
92145C	92145-0466-8V (OPTION)	SPRING,REAR SHOCK,K=53N/MM,SIL		1				
92153	92153-1702	BOLT,PLUG		1				
92161	92161-0329	DAMPER,STOPPER		1				
92210	92210-0270	NUT,PISTON		1				
92210A	92210-0271	NUT,SPRING ADJUSTER		1				
92210B	92210-0272	NUT,SPRING ADJUST NUT		1				

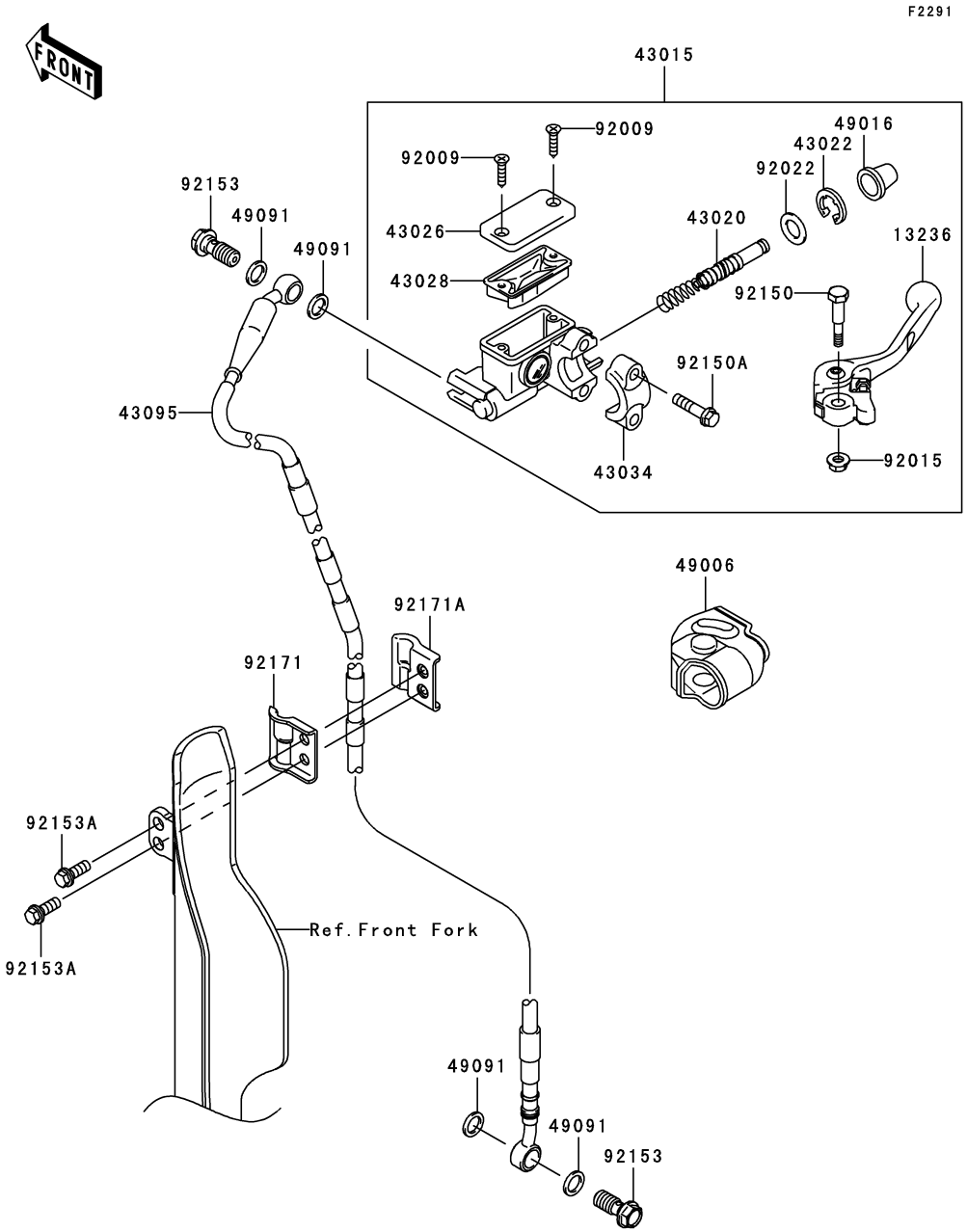

Ref. No.	Part No.	Description	Spec Code	Quantity-KX250 '07				
				T7F				
13236	13236-1346	LEVER-COMP,FRONT BRAKE		1				
43015	43015-1674	CYLINDER-ASSY-MASTER,FR		1				
43020	43020-1123	PISTON-COMP-BRAKE		1				
43022	43022-1010	STOPPER-BRAKE,PISTON		1				
43026	43026-1075	CAP-BRAKE		1				
43028	43028-1067	DIAPHRAGM		1				
43034	43034-1110	HOLDER-BRAKE		1				
43095	43095-0286	HOSE-BRAKE,FR		1				
49006	49006-1344	BOOT,FRONT BRAKE LEVER		1				
49016	49016-1044	COVER-SEAL,MASTER CYLINDER		1				
49091	49091-0001	WASHER-SEAL,10.1X14.5X1.5		4				
92009	92009-1458	SCREW,4MM		2				
92015	92015-1528	NUT,FLANGED,6MM		1				
92022	92022-1814	WASHER		1				
92150	92150-1451	BOLT,LEVER SET		1				
92150A	92150-1452	BOLT		2				
92153	92153-0627	BOLT,OIL,L=23		2				
92153A	92153-0695	BOLT,6X16		2				
92171	92171-0481	CLAMP,BRAKE HOSE,LH		1				
92171A	92171-0482	CLAMP,BRAKE HOSE,RH		1				

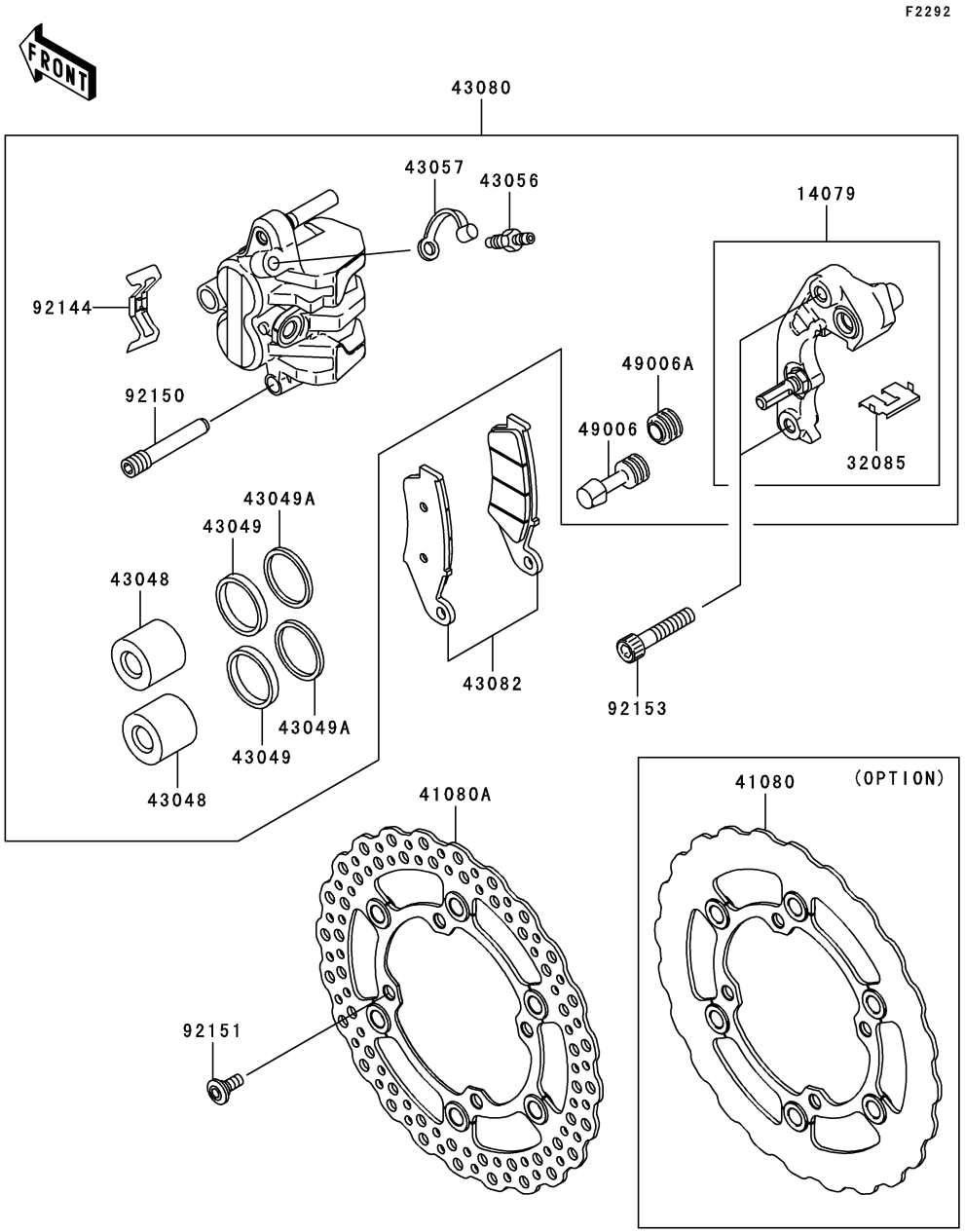

Ref. No.	Part No.	Description	Spec Code	Quantity-KX250 '07	T7F
14079	14079-1097	HOLDER-ASSY,FRONT CALIPER		1	
32085	32085-1361	STOPPER,PAD		1	
41080	41080-0082 (OPTION)	DISC,FR		1	
41080A	41080-0090	DISC,FR		1	
43048	43048-1095	PISTON-CALIPER		2	
43049	43049-1060	PACKING,PISTON SEAL		2	
43049A	43049-1061	PACKING,PISTON SEAL		2	
43056	43056-1055	BREATHER		1	
43057	43057-1001	CAP-BREATHER		1	
43080	43080-0006	CALIPER-SUB-ASSY,FR,LH		1	
43082	43082-0049	PAD-ASSY-BRAKE		1	
49006	49006-1088	BOOT,CALIPER		1	
49006A	49006-1242	BOOT,CALIPER		1	
92144	92144-1721	SPRING,PAD		1	
92150	92150-1691	BOLT,HANGER		1	
92151	92151-1799	BOLT,DISC PLATE,6MM		4	
92153	92153-0517	BOLT,SOCKET,8X40		2	

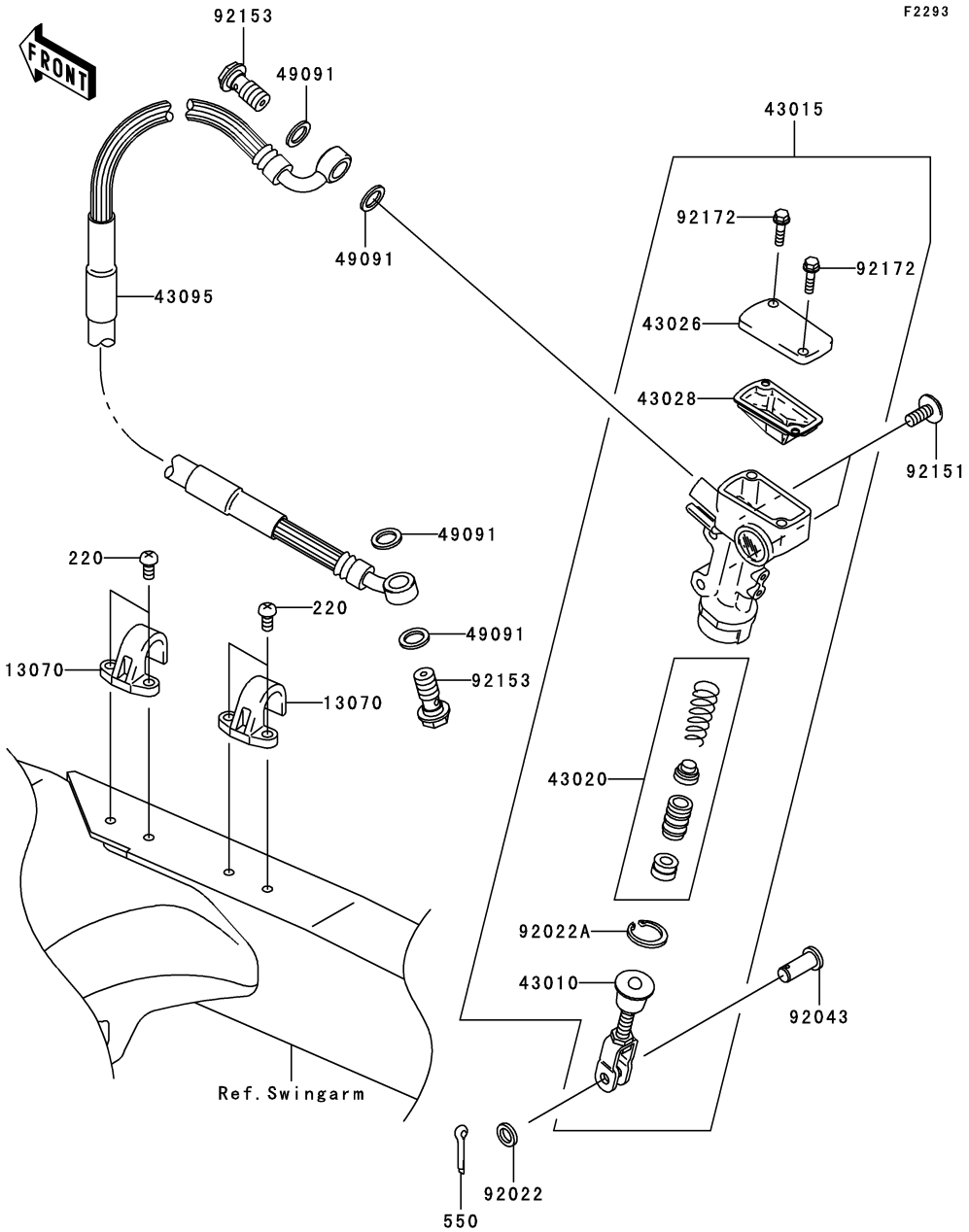

Ref. No.	Part No.	Description	Spec Code	Quantity-KX250 '07 T7F				
13070	13070-0048	GUIDE,BRAKE HOSE		2				
43010	43010-1087	ROD-ASSY-BRAKE		1				
43015	43015-0004	CYLINDER-ASSY-MASTER,RR		1				
43020	43020-1094	PISTON-COMP-BRAKE		1				
43026	43026-1086	CAP-BRAKE		1				
43028	43028-1092	DIAPHRAGM		1				
43095	43095-0187	HOSE-BRAKE,RR		1				
49091	49091-0001	WASHER-SEAL,10.1X14.5X1.5		4				
92022	92022-1028	WASHER,8.5X13X1		1				
92022A	92022-1601	WASHER,CIRCRIP		1				
92043	92043-0004	PIN		1				
92151	92151-1654	BOLT,SOCKET,6X14		2				
92153	92153-0627	BOLT,OIL,L=23		2				
92172	92172-1064	SCREW		2				
220	220B0510	SCREW-PAN-CROS,5X10		4				
550	550D2015	PIN-COTTER,2.0X15		1				

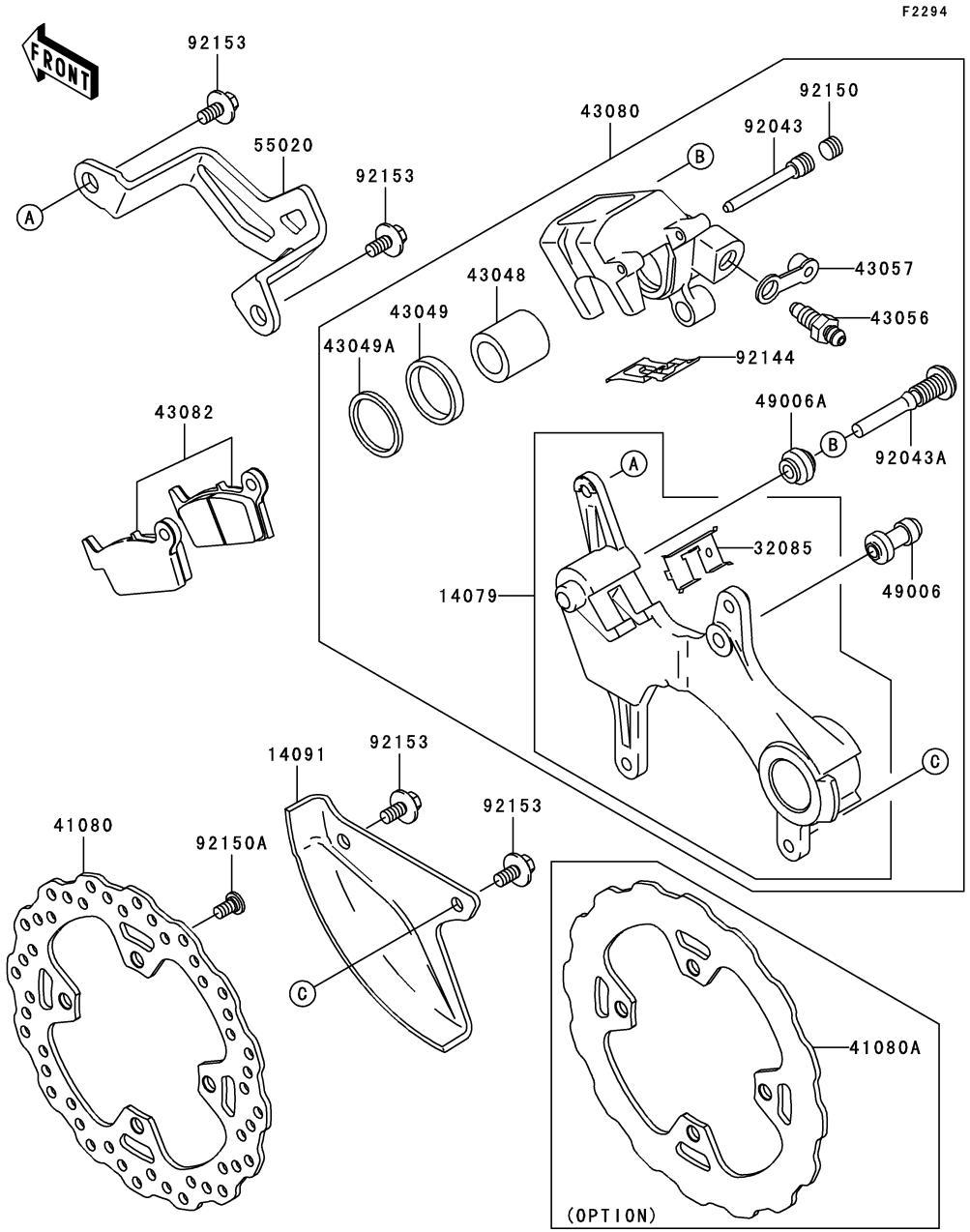

Ref. No.	Part No.	Description	Spec Code	Quantity-KX250 '07 T7F				
14079	14079-0022	HOLDER-ASSY,REAR CALIPER		1				
14091	14091-1523-RZ	COVER,REAR DISC,WHITE		1				
32085	32085-1386	STOPPER,PAD		1				
41080	41080-0076	DISC,RR		1				
41080A	41080-0094 (OPTION)	DISC,RR		1				
43048	43048-1066	PISTON-CALIPER		1				
43049	43049-1063	PACKING		1				
43049A	43049-1064	PACKING		1				
43056	43056-1055	BREATHER		1				
43057	43057-1001	CAP-BREATHER		1				
43080	43080-0037	CALIPER-SUB-ASSY,RR		1				
43082	43082-0048	PAD-ASSY-BRAKE		1				
49006	49006-1088	BOOT,CALIPER		1				
49006A	49006-1242	BOOT,CALIPER		1				
55020	55020-0018	GUARD,RR CALIPER		1				
92043	92043-1507	PIN,HANGER		1				
92043A	92043-1508	PIN		1				
92144	92144-1819	SPRING,PAD		1				
92150	92150-1692	BOLT,PLUG		1				
92150A	92150-1811	BOLT,DISC PLATE,8X15		4				
92153	92153-0936	BOLT,FLANGED,6X14		4				

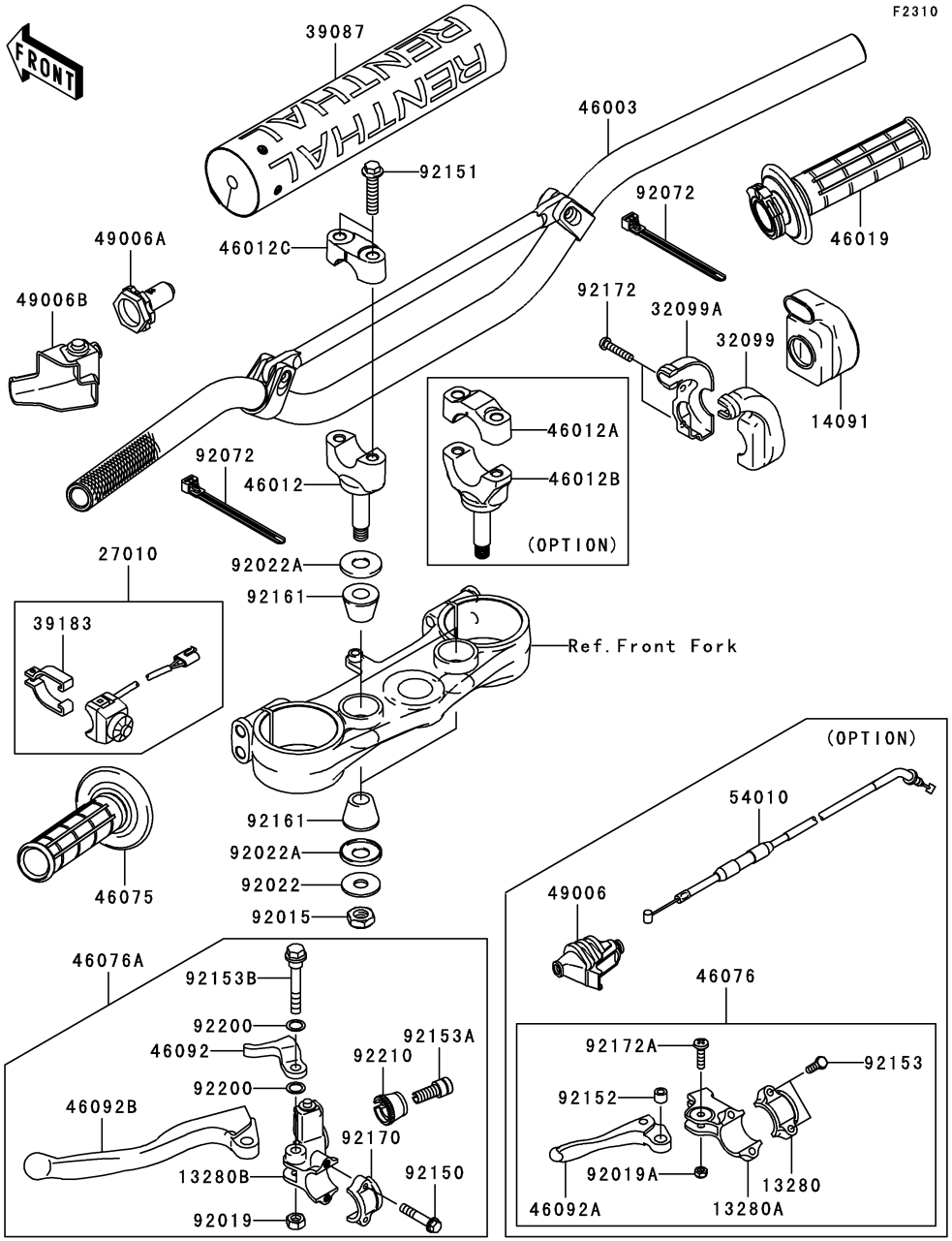

Ref. No.	Part No.	Description	Spec Code	Quantity-KX250 '07				
				T7F				
13280	13280-0055 (OPTION)	HOLDER		1				
13280A	13280-0056 (OPTION)	HOLDER		1				
13280B	13280-0184	HOLDER,CLUTCH LEVER		1				
14091	14091-0182	COVER,THROTTLE CASE		1				
27010	27010-0047	SWITCH,ENGINE STOP		1				
32099	32099-0002	CASE,THROTTLE,RR		1				
32099A	32099-0003	CASE,THROTTLE,FR		1				
39087	39087-0003	PAD-HANDLE		1				
39183	39183-1059	BAND-ASSY,ENGINE STOP SWITCH		1				
46003	46003-0077	HANDLE		1				
46012	46012-0013-10Y	HOLDER-HANDLE,LWR,M.M.GOLD		2				
46012A	46012-0020-10Y (OPTION)	HOLDER-HANDLE,UPP,FAT BAR,GOLD		2				
46012B	46012-0021-10Y (OPTION)	HOLDER-HANDLE,LWR,FAT BAR,GOLD		2				
46012C	46012-0023-10Y	HOLDER-HANDLE,UPP,M.M.GOLD		2				
46019	46019-0014	GRIP-ASSY,THROTTLE		1				
46075	46075-0044	GRIP,LH		1				
46076	46076-0009 (OPTION)	LEVER-ASSY-GRIP,MANUAL DECOMP		1				
46076A	46076-0034	LEVER-ASSY-GRIP,CLUTCH&STARTER		1				
46092	46092-0001	LEVER-GRIP,STARTER		1				
46092A	46092-0004 (OPTION)	LEVER-GRIP		1				
46092B	46092-0007	LEVER-GRIP,CLUTCH		1				
49006	49006-0011 (OPTION)	BOOT		1				
49006A	49006-0027	BOOT,CLUTCH CABLE		1				
49006B	49006-0033	BOOT,CLUTCH LEVER		1				
54010	54010-0019 (OPTION)	CABLE,MANUAL DECOMP		1				
92015	92015-1962	NUT,LOCK,10MM		2				
92019	92019-008	NUT,LOCK,6MM		1				
92019A	92019-014 (OPTION)	NUT,LOCK,5MM		1				
92022	92022-1088	WASHER,10.2X28X2		2				
92022A	92022-1737	WASHER		4				
92072	92072-0055	BAND,L=100		2				
92150	92150-1474	BOLT		2				

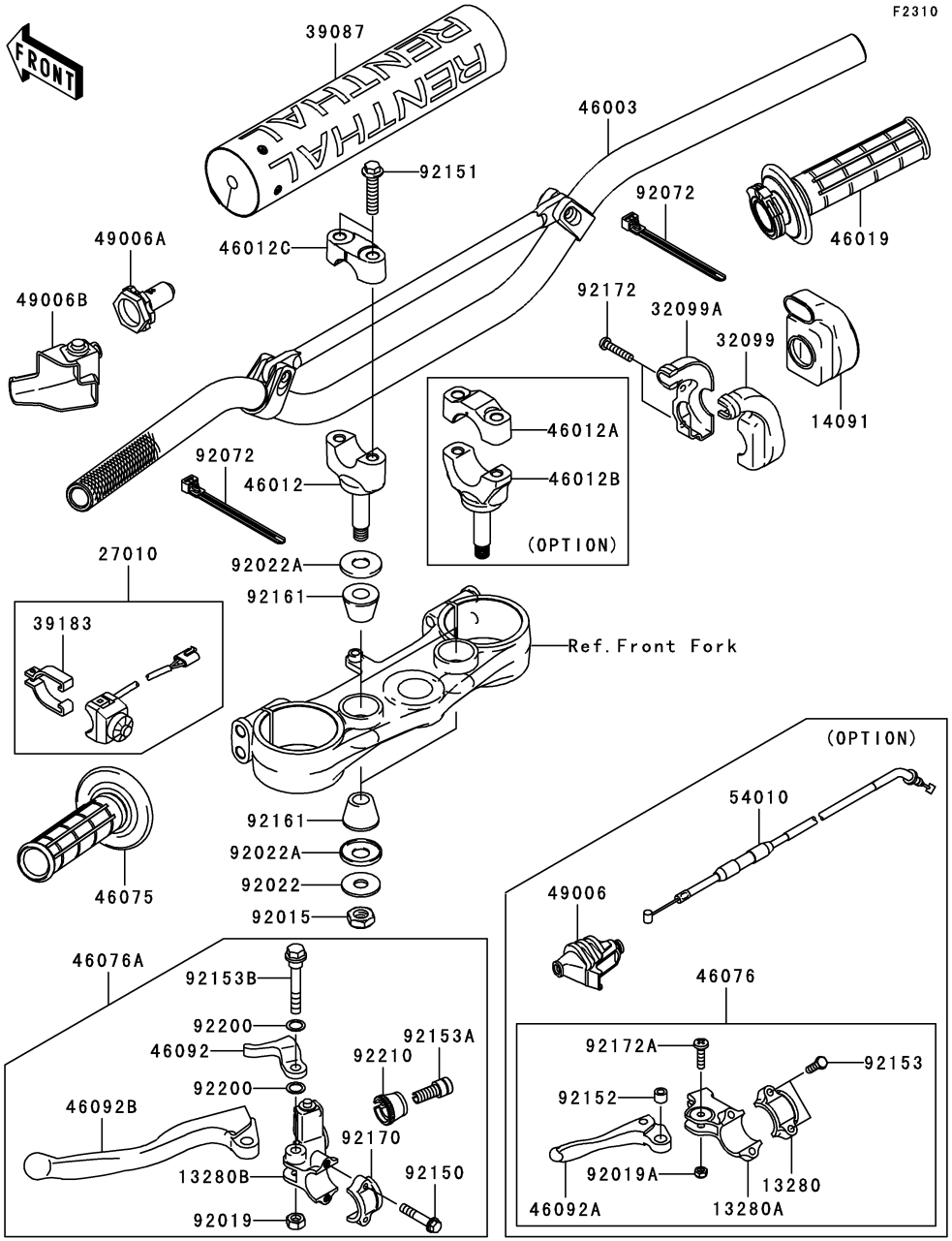

Ref. No.	Part No.	Description	Spec Code	Quantity-KX250 '07				
				T7F				
92151	92151-1537	BOLT,FLANGED,8X35		4				
92152	92152-0135 (OPTION)	COLLAR		1				
92153	92153-0617 (OPTION)	BOLT,5X16		2				
92153A	92153-0773	BOLT,BOLT ADJUSTING		1				
92153B	92153-1506	BOLT,6MM		1				
92161	92161-0113	DAMPER,HANDLE HOLDER		4				
92170	92170-1226	CLAMP,LEVER HOLDER		1				
92172	92172-0069	SCREW,5X20		2				
92172A	92172-0125 (OPTION)	SCREW,5X20		1				
92200	92200-0300	WASHER		2				
92210	92210-0167	NUT,BOLT WIRE ADJUSTING		1				

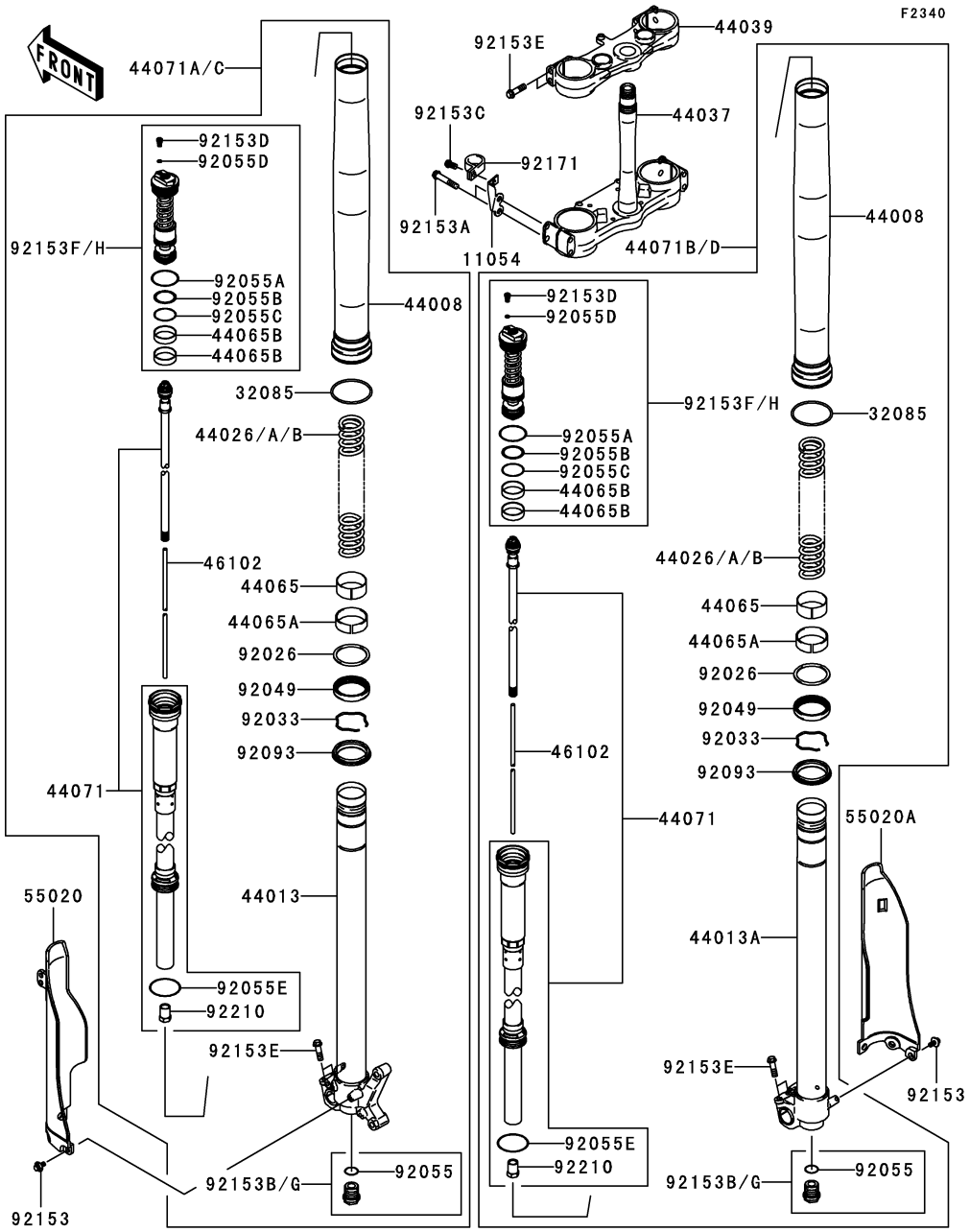

Ref. No.	Part No.	Description	Spec Code	Quantity-KX250 '07	T7F
11054	11054-0111	BRACKET		1	
32085	32085-0073	STOPPER,RING		2	
44008	44008-0029-828	PIPE-FORK OUTER,GOLD		2	
44013	44013-0040	PIPE-FORK INNER,LH		1	
44013A	44013-0041	PIPE-FORK INNER,RH		1	
44026	44026-0075	SPRING-FRONT FORK,K=4.2N/MM		2	
	(OPTION)				
44026A	44026-0076	SPRING-FRONT FORK,K=4.4N/MM		2	
44026B	44026-0077	SPRING-FRONT FORK,K=4.6N/MM		2	
	(OPTION)				
44037	44037-0034-10Y	HOLDER-FORK UNDER,M.M.GOLD		1	
44039	44039-0036-10Y	HOLDER-FORK UPPER,M.M.GOLD		1	
44065	44065-0016	BUSHING-FRONT FORK,SLIDE		2	
44065A	44065-0017	BUSHING-FRONT FORK,GUIDE		2	
44065B	44065-0018	BUSHING-FRONT FORK,SLIDE		4	
44071	44071-0382	DAMPER-ASSY,FORK		2	
44071A	44071-5015	DAMPER-ASSY,FORK,LH			
	L- -		AS	1	
44071B	44071-5016	DAMPER-ASSY,FORK,RH			
	L- -		AS	1	
44071C	44071-5019	DAMPER-ASSY,FORK,LH			
	L- -		EU	1	
44071D	44071-5020	DAMPER-ASSY,FORK,RH			
	L- -		EU	1	
46102	46102-0075	ROD,PUSH		2	
55020	55020-0172-RZ	GUARD,FORK,LH,WHITE		1	
55020A	55020-0334-RZ	GUARD,FORK,RH,WHITE		1	
92026	92026-0089	SPACER,SEAL		2	
92033	92033-0039	RING-SNAP		2	
92049	92049-0074	SEAL-OIL		2	
92055	92055-0090	RING-O,CENTER BOLT		2	
92055A	92055-0091	RING-O		2	
92055B	92055-0092	RING-O		2	
92055C	92055-0093	RING-O		2	
92055D	92055-0094	RING-O		2	
92055E	92055-0095	RING-O		2	
92093	92093-0059	SEAL,DUST		2	
92153	92153-0936	BOLT,FLANGED,6X14		6	
92153A	92153-0990	BOLT,FLANGED,8X45		4	
92153B	92153-1395	BOLT,CENTER			
	L- -		EU	2	

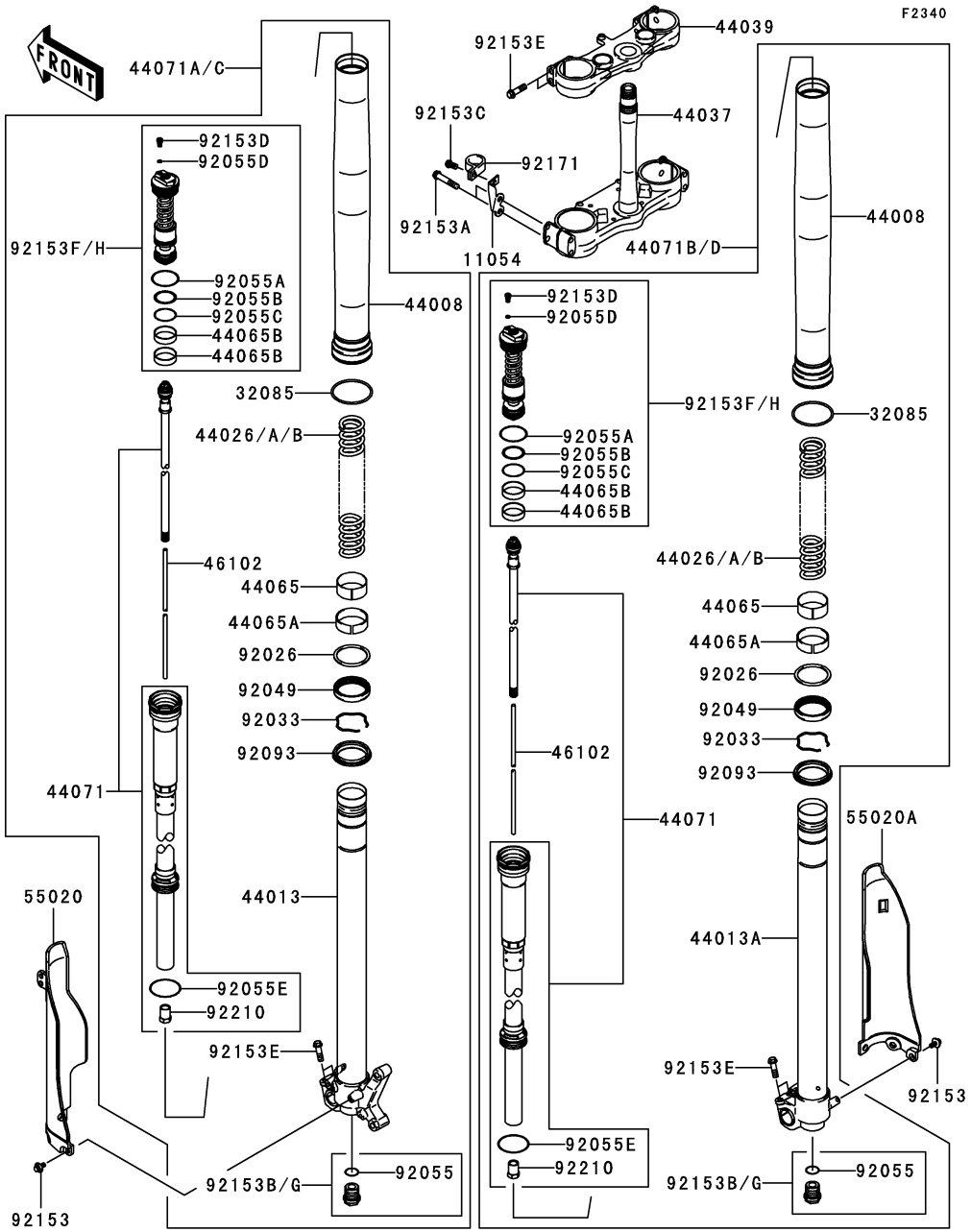

Ref. No.	Part No.	Description	Spec Code	Quantity-KX250 '07	T7F
92153C	92153-1397	BOLT,FLANGED		1	
92153D	92153-1398	BOLT,PLUG		2	
92153E	92153-1399	BOLT,FLANGED,8X40		8	
92153F	92153-1701-10J	BOLT,FORK,GOLD			
	L- -		AS	2	
92153G	92153-1778	BOLT,CENTER			
	L- -		AS	2	
92153H	92153-1780-10J	BOLT,FORK,GOLD			
	L- -		EU	2	
92171	92171-0506	CLAMP,BRAKE HOSE		1	
92210	92210-0268	NUT,LOCK		2	

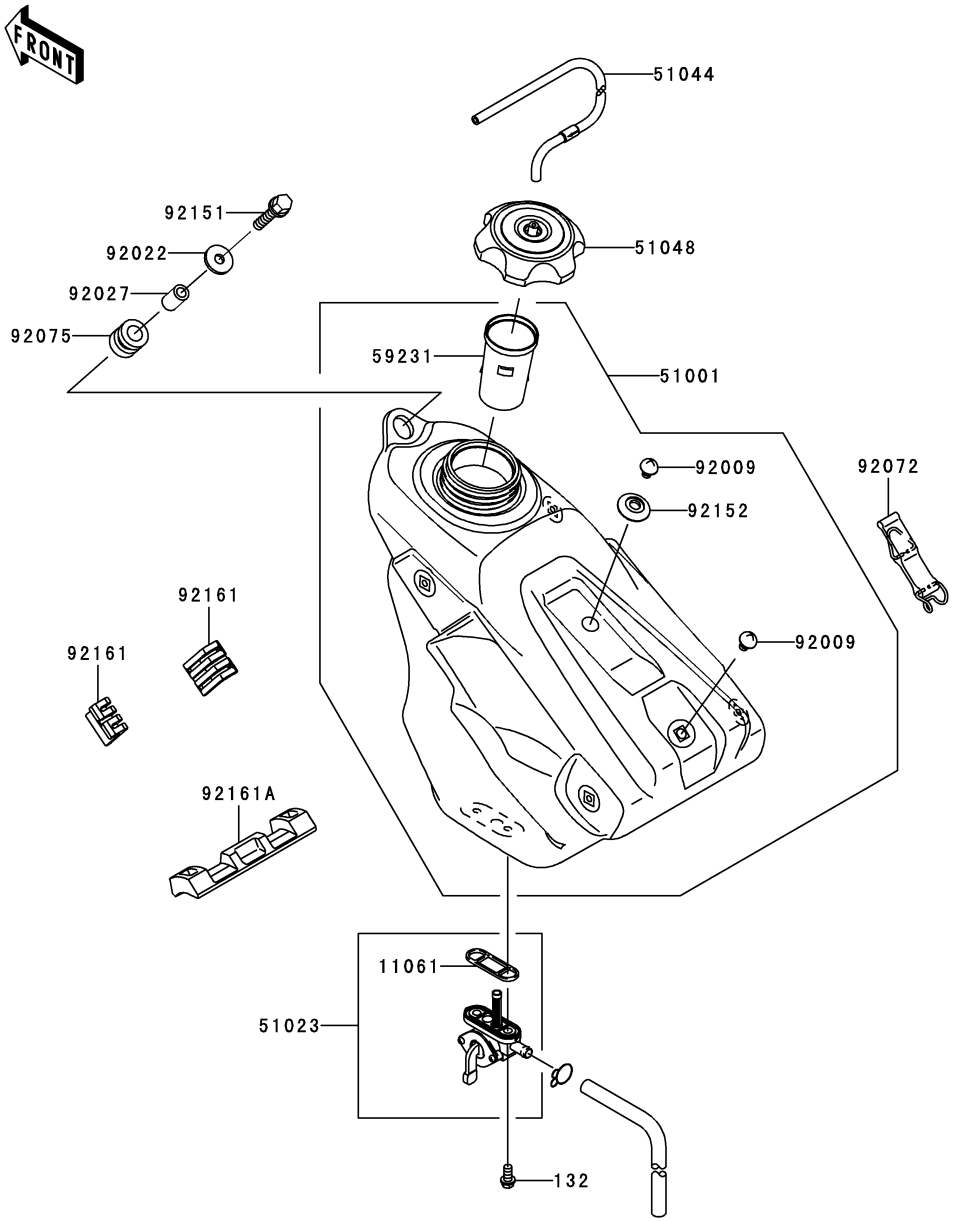

Ref. No.	Part No.	Description	Spec Code	Quantity-KX250 '07 T7F
11061	11061-0181	GASKET,FUEL TAP		1
51001	51001-0110-6Z	TANK-COMP-FUEL,F.BLACK		1
51023	51023-0025	TAP-ASSY,FUEL		1
51044	51044-0023	TUBE-ASSY,TANK CAP		1
51048	51048-0009	CAP-ASSY-TANK,FUEL		1
59231	59231-0019	FILLER		1
92009	92009-1971	SCREW,6MM		2
92022	92022-1690	WASHER,6.5X24X2		1
92027	92027-1966	COLLAR,6.8X10X14		1
92072	92072-0045	BAND,FUEL TANK		1
92075	92075-1787	DAMPER		1
92151	92151-1930	BOLT,FLANGED-SMALL,6X25		1
92152	92152-1346	COLLAR		1
92161	92161-0254	DAMPER,FUEL TANK,SIDE		2
92161A	92161-0255	DAMPER,FUEL TANK,REAR		1
132	132L0612	BOLT-FLANGED-SMALL,6X12		2

F2510

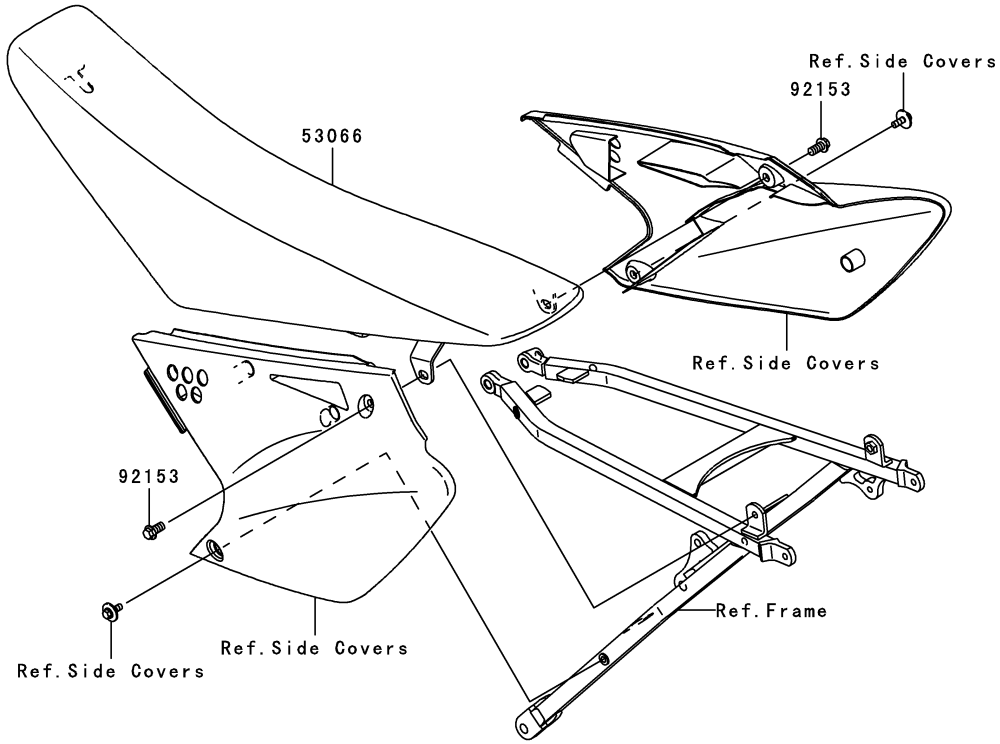

Ref. No.	Part No.	Description	Spec Code	Quantity-KX250 '07 T7F				
53066	53066-0131-336	SEAT-ASSY,GREEN/BLACK		1				
92153	92153-1308	BOLT,FLANGED,8X16		2				

GRID NO. **F-13** *This grid covers:* **Cables**

F2540

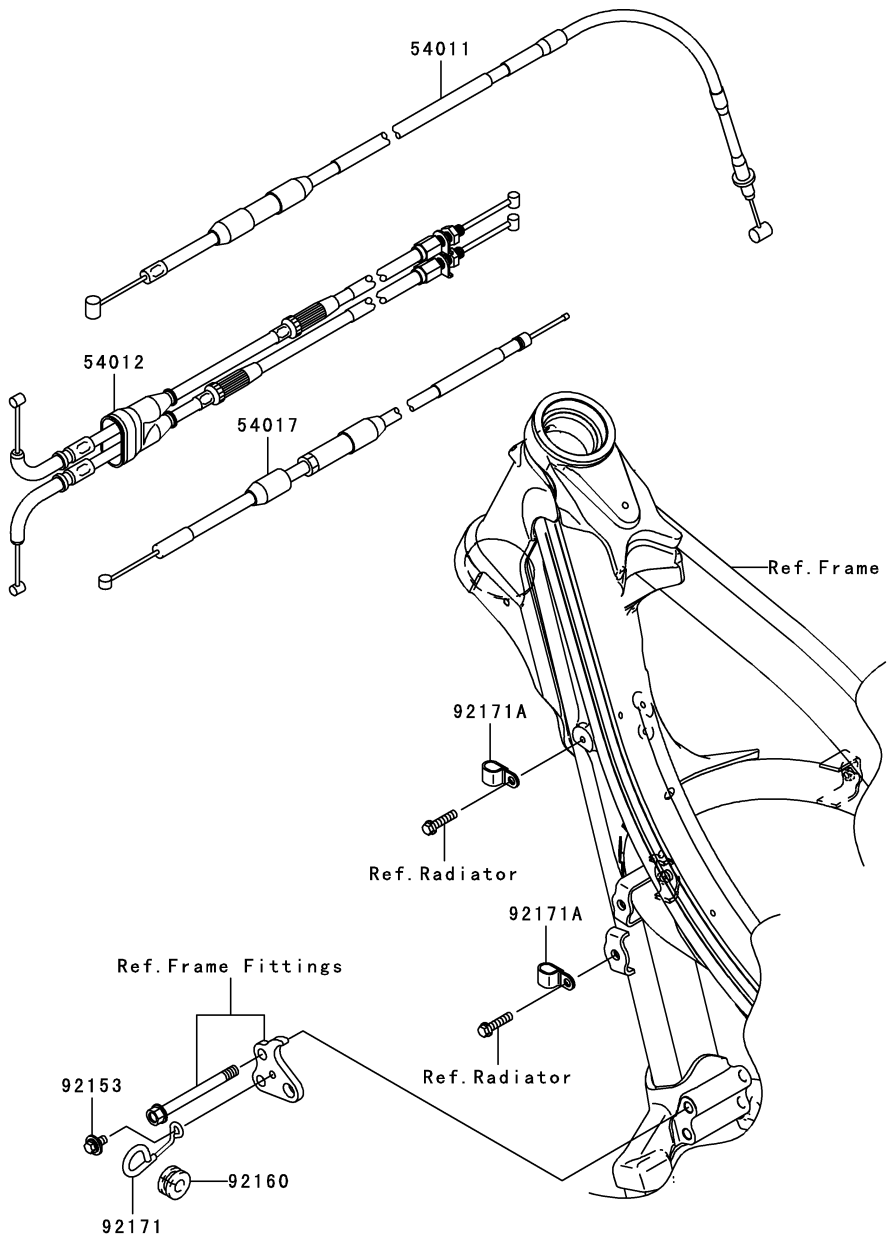

Ref. No.	Part No.	Description	Spec Code	Quantity-KX250 ’07				
				T7F				
54011	54011-0044	CABLE-CLUTCH		1				
54012	54012-0156	CABLE-THROTTLE		1				
54017	54017-0014	CABLE-STARTER		1				
92153	92153-0503	BOLT,6X12		1				
92160	92160-1913	DAMPER		1				
92171	92171-0253	CLAMP,CABLE		1				
92171A	92171-0614	CLAMP		2				

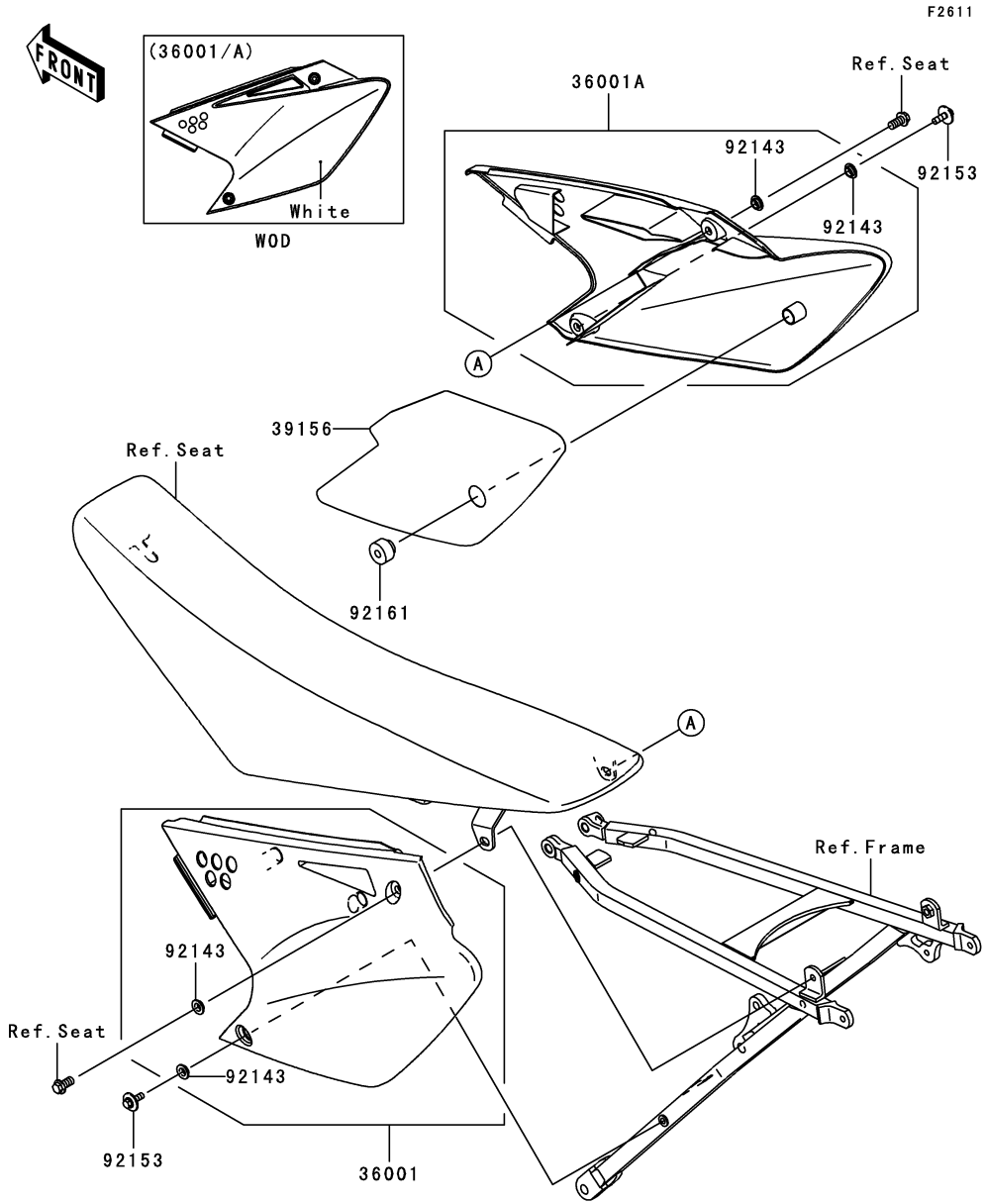

Ref. No.	Part No.	Description	Spec Code	Quantity-KX250 '07				
				T7F				
36001	36001-0075-266	COVER-SIDE,LH,S.WHITE		1				
36001A	36001-0087-266	COVER-SIDE,RH,S.WHITE		1				
39156	39156-0092	PAD,SIDE COVER,RH		1				
92143	92143-1196	COLLAR		4				
92153	92153-0863	BOLT,6X16		2				
92161	92161-0073	DAMPER		1				

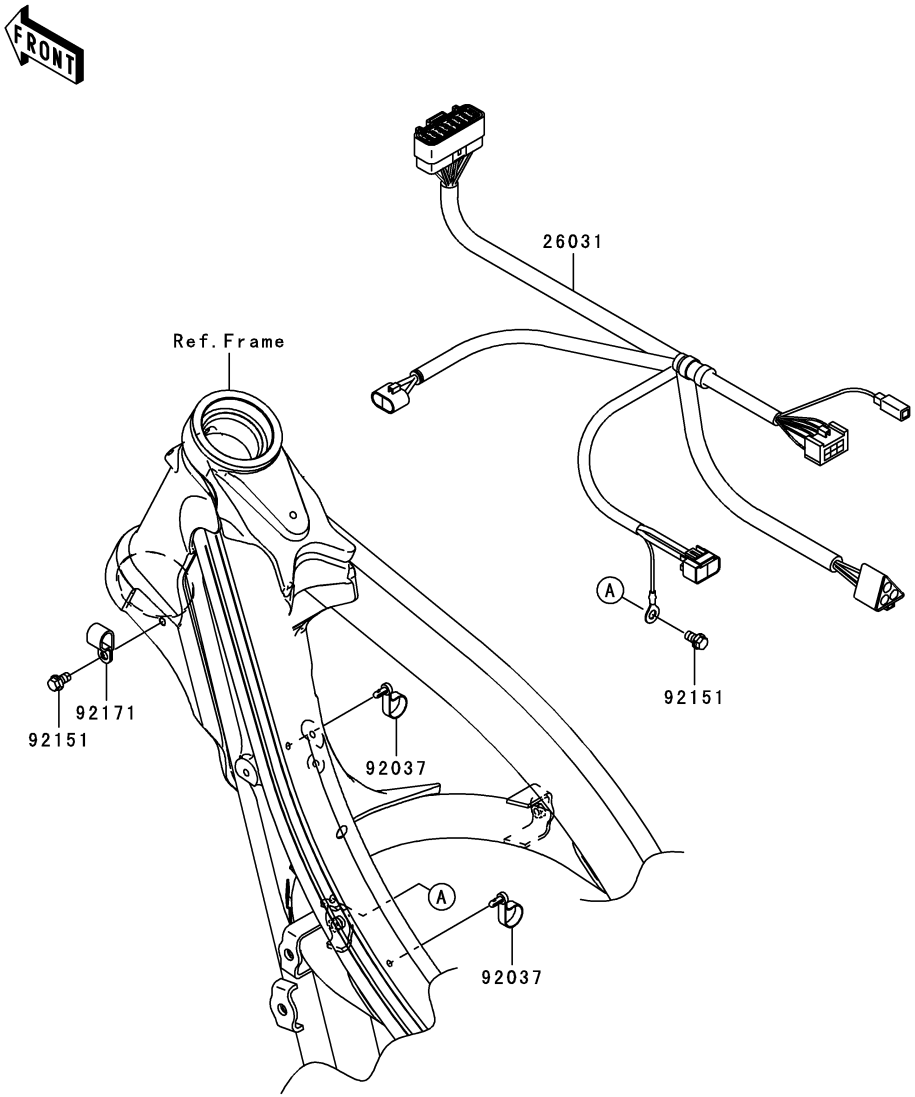

Ref. No.	Part No.	Description	Spec Code	Quantity-KX250 ’07 T7F				
26031	26031-0316	HARNESS		1				
92037	92037-1163	CLAMP,SPEED,L=58		2				
92151	92151-1233	BOLT,FLANGED,6X10		2				
92171	92171-0614	CLAMP		1				

F2810

Ref. No.	Part No.	Description	Spec Code	Quantity-KX250 ’07 T7F				
92104	92104-0004	GASKET-LIQUID,TB1211F		1				
92104A	92104-1063	GASKET-LIQUID,TB1216,GRAY		1				
92104B	92104-1064	GASKET-LIQUID,BLACK TB1216B		1				
92110	92110-0004	TOOL-WRENCH,NIPPLE,6X8		1				
92110A	92110-0005	TOOL-WRENCH,BOX,16MM		1				

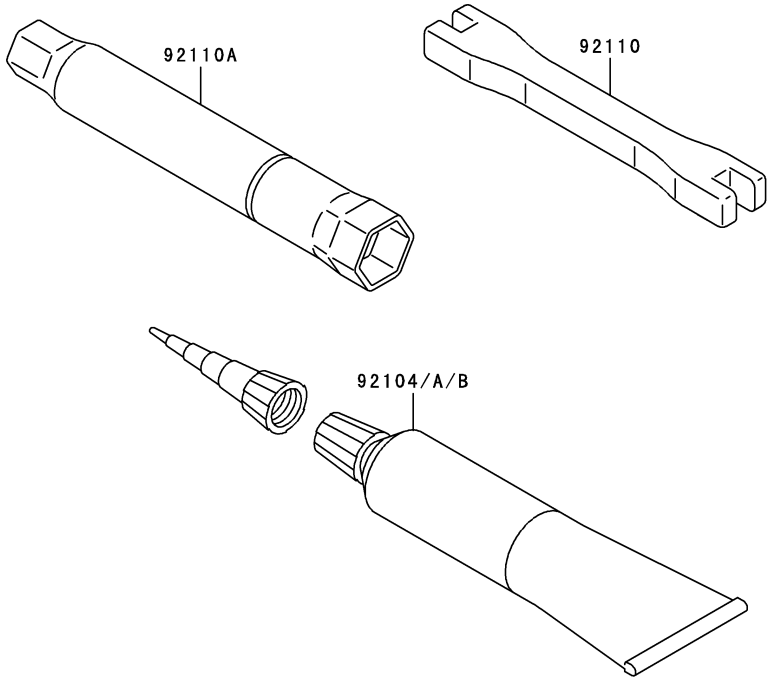

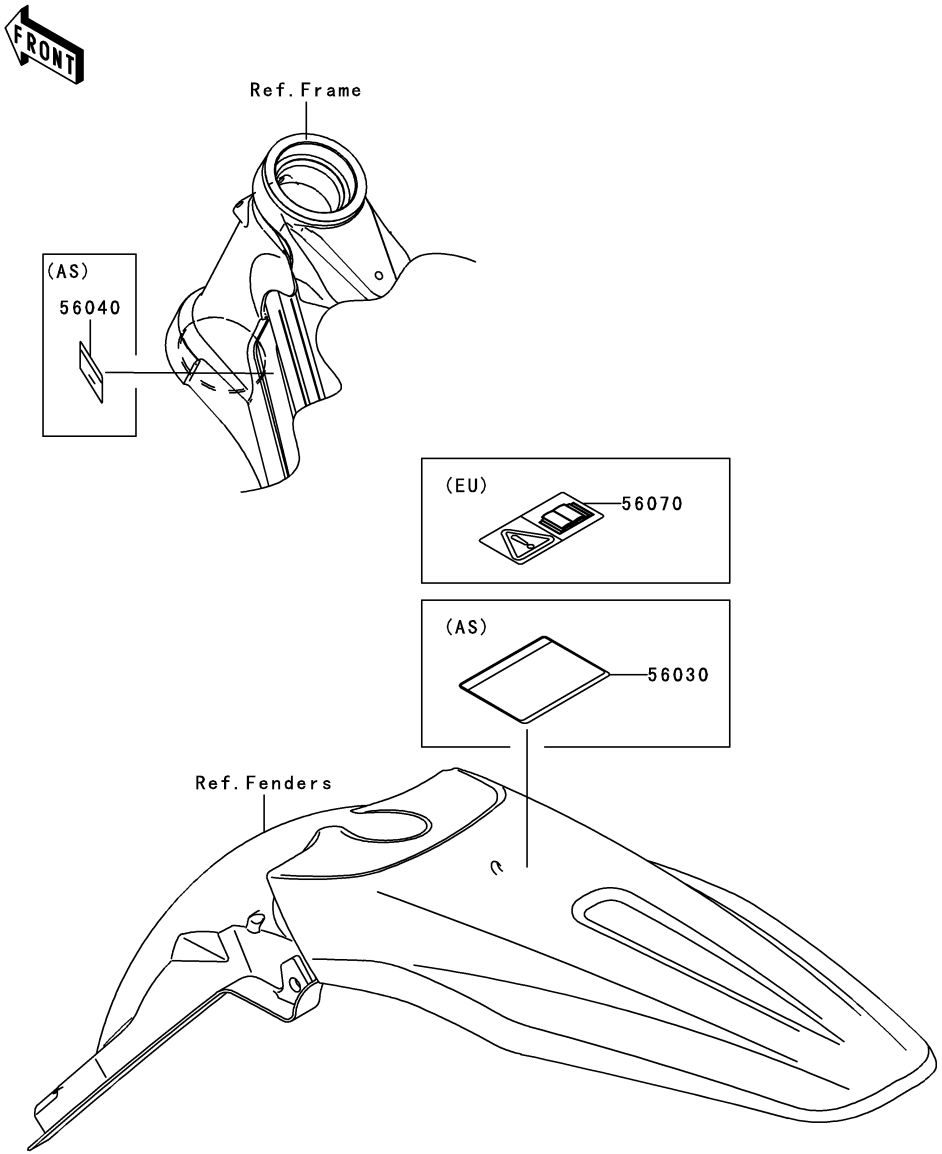

F2860

Ref. No.	Part No.	Description	Spec Code	Quantity-KX250 ’07				
				T7F				
56030	56030-1228	LABEL,IMPORTANT NOTICE						
	L- - - -

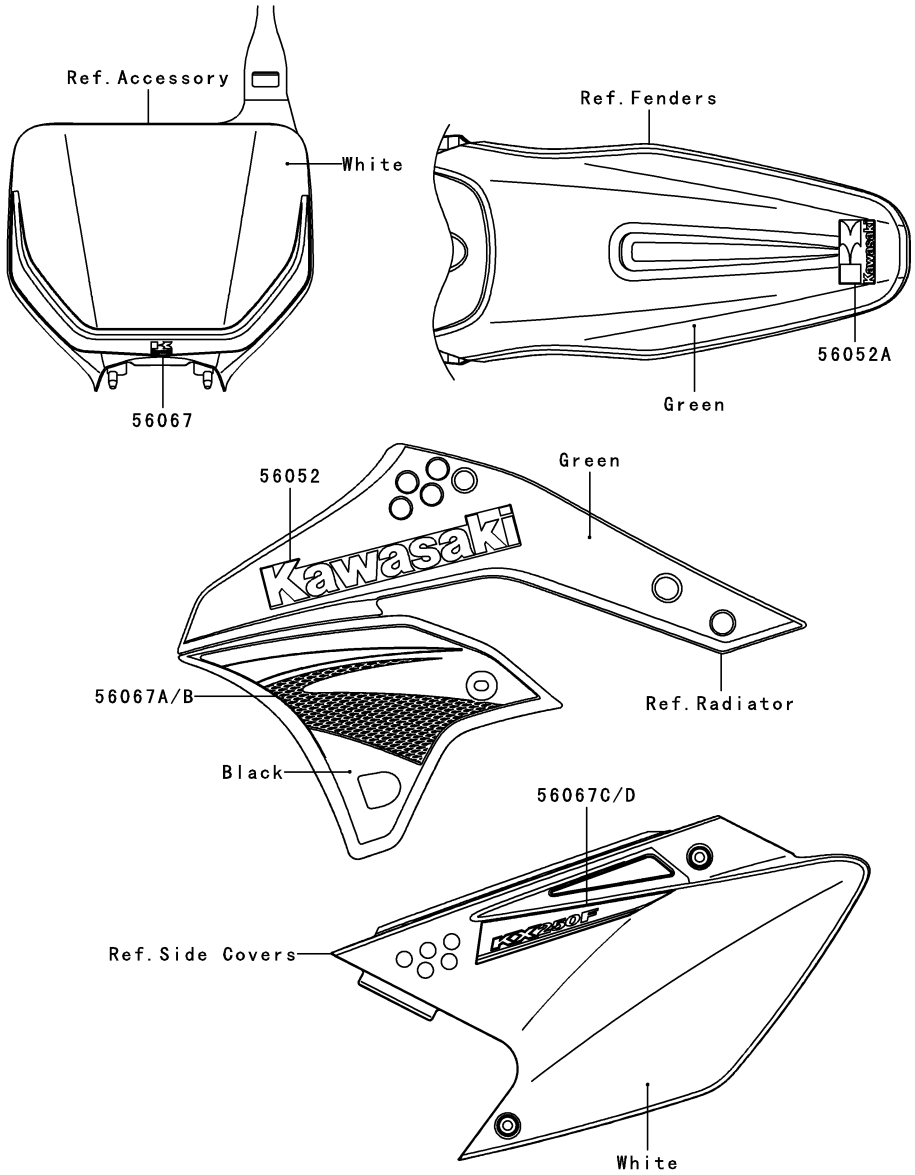

Ref. No.	Part No.	Description	Spec Code	Quantity-KX250 ’07 T7F				
56052	56052-0886	MARK,SHROUD,KAWASAKI		2				
56052A	56052-0887	MARK,RR FENDER,KAWASAKI		1				
56067	56067-0970	PATTERN,NUMBER PLATE		1				
56067A	56067-0975	PATTERN,SHROUD,LH		1				
56067B	56067-0976	PATTERN,SHROUD,RH		1				
56067C	56067-0977	PATTERN,SIDE COVER,LH		1				
56067D	56067-0978	PATTERN,SIDE COVER,RH		1				

F2910

Ref. No.	Part No.	Description	Spec Code	Quantity-KX250 ’07 T7F				
58029	58029-0003-266	PLATE-NUMBER,S.WHITE		1				
92153	92153-0503	BOLT,6X12		1				

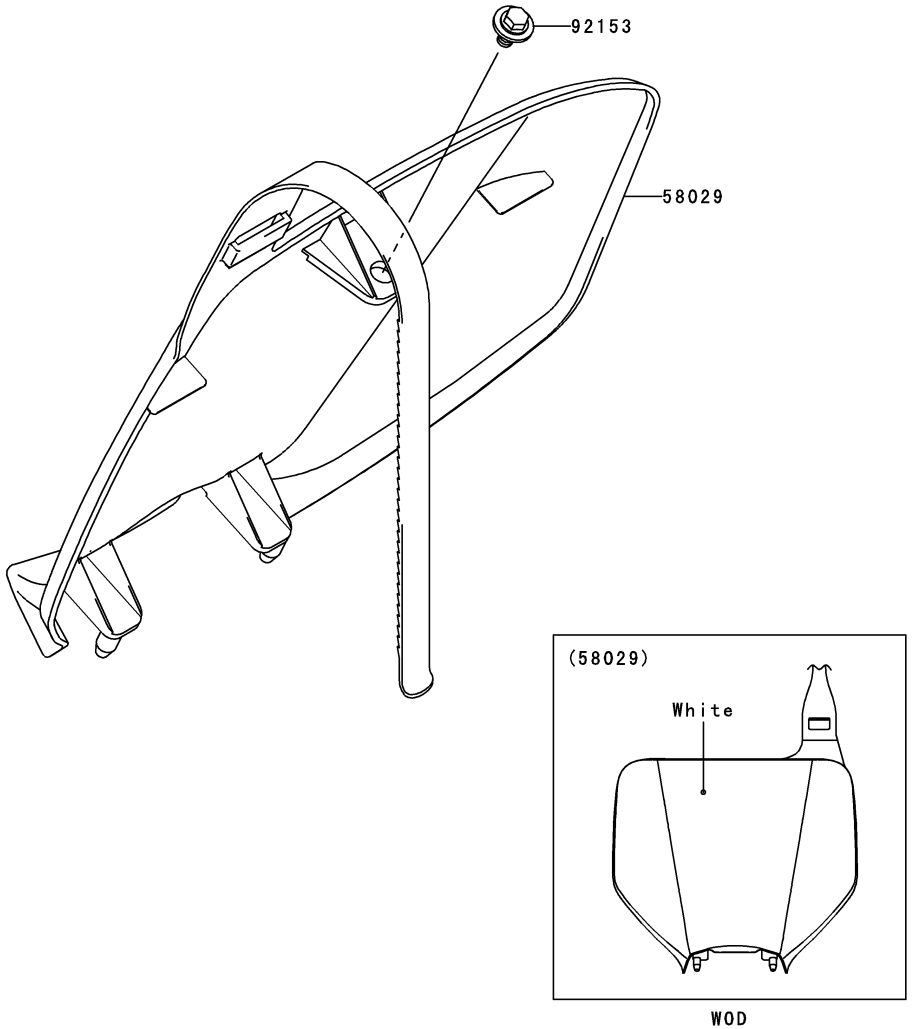

F2920

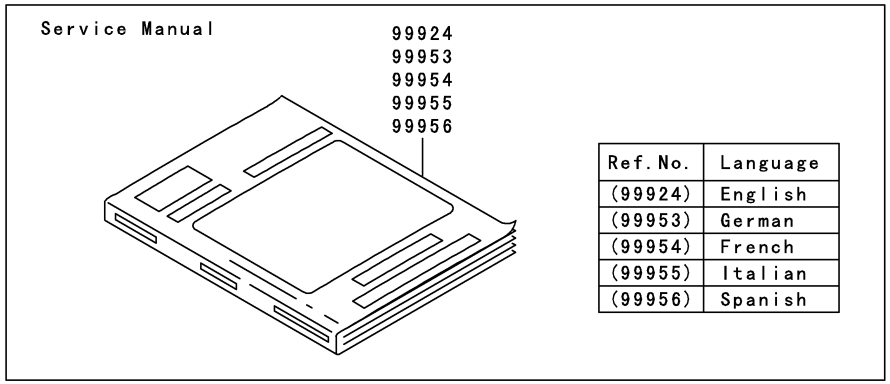

Ref. No.	Language
(99924)	English
(99953)	German
(99954)	French
(99955)	Italian
(99956)	Spanish

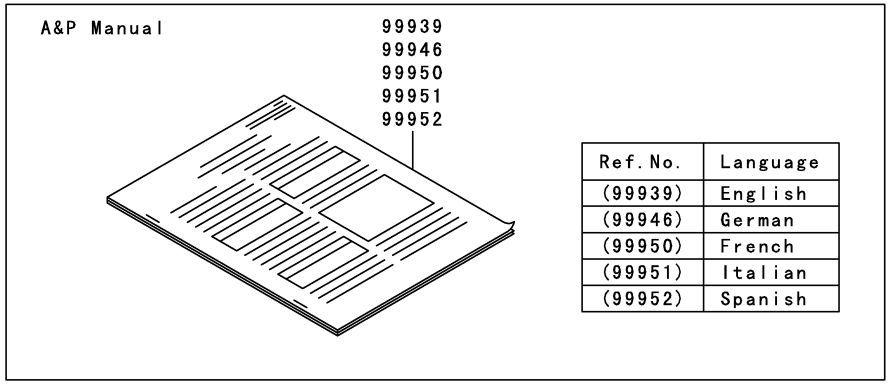

Ref. No.	Language
(99939)	English
(99946)	German
(99950)	French
(99951)	Italian
(99952)	Spanish

Ref. No.	Part No.	Description	Spec Code	Quantity-KX250 '07				
				T7F				
99924	99924-1354-01	SERVICE MANUAL,ENGLISH						
	L- -		EU	1				
99939	99939-1314-01	A&P MANUAL,ENGLISH						
	L- -		EU	1				
99946	99946-1036-01	A&P MANUAL,GERMAN						
	L- -		EU	1				
99950	99950-1041-01	A&P MANUAL,FRENCH						
	L- -		EU	1				
99951	99951-1027-01	A&P MANUAL,ITALIAN						
	L- -		EU	1				
99952	99952-1011-01	A&P MANUAL,SPANISH						
	L- -		EU	1				
99953	99953-1033-01	SERVICE MANUAL,GERMAN						
	L- -		EU	1				
99954	99954-1042-01	SERVICE MANUAL,FRENCH						
	L- -		EU	1				
99955	99955-1025-01	SERVICE MANUAL,ITALIAN						
	L- -		EU	1				
99956	99956-1009-01	SERVICE MANUAL,SPANISH						
	L- -		EU	1				

Part No.	Grid No.
11004-0003	B-3
11005-0069	B-5
11008-0116	B-3
11011-0055-6Z	B-6
11012-1581	E-11
11013-0011	B-6
11054-0111	F-9
11054-0241	E-4
11061-0024	B-4
11061-0025	B-5
11061-0027	B-7
11061-0030	C-6
11061-0031	C-6
11061-0032	C-6
11061-0077	C-7
11061-0101	B-7
11061-0181	F-11
11065-0087	C-14
11065-0145	E-14
11065-0164	E-14
11065-1253	E-12
12004-0023	B-8
12005-0002	B-8
12009-0010	B-8
12009-1073	B-8
12011-1053	B-8
12022-0006	C-5
12032-0005	B-8
12032-0006	B-8
12048-1181	B-10
12053-0009	B-10
12053-0010	B-10
12053-0011	C-6
12053-0017	B-10
12053-0018	C-6
12053-0053	E-5
12053-0061	E-5
120P0525	C-12
120P0612	B-3
120P0625	B-3
120P0625	B-5
13001-0088	B-5
13002-0018	B-5
13008-0028	B-5
13031-0074	B-11
13032-0047	B-11
13034-0014	B-11
13035-0015	B-11
13037-0089	B-11
13037-0108	B-11
13061-0147	B-12
13064-0043	B-12
13066-0004	B-12
13070-0011	B-12
13070-0048	F-5
13070-0057	E-14
13078-0005	B-12
13078-0010	C-4
13087-0017	B-13
13088-0018	B-13
13089-013	B-13
13095-0049	B-13
13097-0008	B-11
130G0510	C-12
130G0512	B-6
130Z0514	C-14
13102-0020	B-13
13107-0130	C-14
13116-0003	B-13
13127-0045	B-14
13128-0032	B-14
13140-0038	C-3
13140-0039	C-3
13141-0022	C-3
13144-0035	B-14
13144-0036	B-14
13145-0024	C-3
13151-0006	C-3
13156-0050	C-4
13161-0047	C-4
13165-0017	C-4
13168-0051	C-7
13187-1089	B-13
13206-1062	B-12
13234-0005	C-11
13234-0009	B-3
13235-0001	E-14
13236-0097	E-13
13236-0128	C-4
13236-1346	F-3
13262-0382	B-14
13262-0383	B-14
13262-0384	B-14
13262-0385	B-14
13262-0386	B-14
13262-0388	B-14
13262-0389	B-14
13262-0437	B-14
13262-0495	B-14
13271-0241	C-7
13271-0593	E-5
13271-0675	B-3
13271-0730	B-6
13271-0802	C-4
13271-0808	B-10
13271-0858	E-14
13271-0886	C-5
13271-0887	C-5
13271-1833	E-5
13280-0038	B-3
13280-0055	F-7
13280-0056	F-7
13280-0108	B-6
13280-0163	B-13
13280-0170	B-6
13280-0184	F-7
132G0608	C-5
132G0612	B-10
132G0640	C-5
132G0660	C-5
132G0665	C-5
132G0670	C-5
132L0612	B-3
132L0612	C-14
132L0612	F-11
132L0625	D-3
132L0818	B-7
14001-0097	C-5
14013-0001	B-10
14013-0002	B-10
14024-1971	C-7
14026-0026	C-6
14031-0077	C-6
14032-0049	C-6
14032-0057	C-6
14037-0058-RZ	D-3
14037-0063-RZ	D-3
14044-0002	B-13
14073-0139	B-6
14079-0022	F-6
14079-1097	F-4
14091-0058	B-4
14091-0182	F-7
14091-0208	C-7
14091-0209	C-7
14091-1523-RZ	F-6
15004-0010	C-7
15004-0013	C-7
16007-0002	B-8
16007-0029	B-8
16012-0002	C-7
16014-0004	C-7
16016-0009	C-7
16016-0017	C-7
16021-0005	C-7
16025-0009	C-7
16025-0013	C-7
16030-1057	C-7
16031-1100	C-7
16039-0230	C-7
16041-0004	C-7
16044-007	C-7
16049-1051	C-7
16065-0041	B-3
16142-0003	C-11
16142-0020	C-14
16154-0063	C-11
16154-0066	C-11
16157-0001	C-7
16159-1054	C-7
16170-0003	C-7
16187-0238	C-7
16187-0239	C-7
16187-0240	C-7
16187-0241	C-7
16187-0242	C-7
16187-0262	C-7
16187-0263	C-7
16187-0264	C-7
16187-0265	C-8
16187-0266	C-8
172G0612	C-4
18046-0042	B-7
18088-0258	B-7
18100-0049	B-7
18100-0051	B-7
21003-0048	C-12
21007-0070	C-12
21007-0071	C-12
21007-0072	C-12
21083-0035	C-8
21118-0004	B-10
21119-0083	C-13
21121-0021	C-13
21176-0016	C-8
220B0510	F-5
220D0408	C-10
220D0414	C-10
225D0510	C-5
26031-0316	G-3
27010-0047	F-7
290CA0808	B-12
31064-0078	B-7
31064-0085	B-7
311G0600	C-4
32054-0020	E-7
32054-0021	E-7
32085-0011	C-5
32085-0073	F-9
32085-0077	E-14
32085-1361	F-4
32085-1386	F-6
32099-0002	F-7
32099-0003	F-7
32099-0018	C-11
32160-0192	E-3
32160-0194	E-3
32190-0172	E-4
32190-0173	E-4
32190-0231	E-4
33001-0107	E-5
33032-0012	E-5
33040-0020	E-5
33040-1189	E-5
34024-1396-458	E-9
34028-0014	E-7
34028-0015	E-7
35004-0078-290	E-8
35019-0050	E-8
35023-0100-290	E-8
36001-0075-266	F-14
36001-0087-266	F-14
39007-0057	E-6
39061-0054	D-3
39061-0074	D-3
39062-0091	D-3
39062-0126	D-3
39062-0127	D-3
39062-0129	D-3
39062-0130	D-3
39062-0153	D-3
39087-0003	F-7
39111-0022	E-6
39115-0007	C-11
39115-0012	B-12
39156-0092	F-14
39183-1059	F-7
39192-0037	C-14
41009-0035	E-10
41009-0036	E-10
41009-0064	E-10
41009-0076	E-10
41022-1107	E-10
41022-1142	E-10
41023-1009	E-10
41023-1081	E-10
41024-010	E-10
41024-011	E-10
41024-011	E-10
41025-0004	E-10
41025-1411	E-10
41025-1435	E-10
41029-0003	E-10
41029-1204	E-10
41029-1330	E-10
41030-1172	E-10
41032-0002	E-10
41032-1077	E-10
41032-1085	E-10
41032-1086	E-10
41032-1086	E-10
41034-0035-10Y	E-12
41034-0037-10Y	E-11
41068-0004	E-11
41068-1466	E-12
41080-0076	F-6
41080-0082	F-4
41080-0090	F-4
41080-0094	F-6
41090-0033-10Y	E-10
41090-0035-10Y	E-10
41090-1154	E-10
410B0800	E-12
411S0600	B-7
42036-0019	E-5
42036-0020	E-6
42036-0021	E-6
42036-0022	E-6
42036-0030	E-6
42036-1351	E-6
42041-1381	E-12
42041-1382	E-12
42041-1383	E-12
42041-1384	E-12
42041-1408	E-12
42041-1447	E-12
42041-1448	E-12
42041-1449	E-12
42041-1450	E-12
42041-1501	E-12

Part No.	Grid No.
43010-1087	F-5
43015-0004	F-5
43015-1674	F-3
43020-1094	F-5
43020-1123	F-3
43022-1010	F-3
43026-1075	F-3
43026-1086	F-5
43028-0001	C-8
43028-1067	F-3
43028-1092	F-5
43034-1110	F-3
43048-1066	F-6
43048-1095	F-4
43049-1060	F-4
43049-1061	F-4
43049-1063	F-6
43049-1064	F-6
43056-1055	F-4
43056-1055	F-6
43057-1001	F-4
43057-1001	F-6
43058-0012	E-14
43078-0030	E-14
43080-0006	F-4
43080-0037	F-6
43082-0048	F-6
43082-0049	F-4
43089-0012-829	E-14
43095-0187	F-5
43095-0286	F-3
44008-0029-828	F-9
44013-0040	F-9
44013-0041	F-9
44026-0075	F-9
44026-0076	F-9
44026-0077	F-9
44037-0034-10Y	F-9
44039-0036-10Y	F-9
44065-0016	F-9
44065-0017	F-9
44065-0018	F-9
44071-0382	F-9
44071-5015	F-9
44071-5016	F-9
44071-5019	F-9
44071-5020	F-9
45014-5028	E-14
46003-0077	F-7
46012-0013-10Y	F-7
46012-0020-10Y	F-7
46012-0021-10Y	F-7
46012-0023-10Y	F-7
46019-0014	F-7
46075-0044	F-7
46076-0009	F-7
46076-0034	F-7
46092-0001	F-7
46092-0004	F-7
46092-0007	F-7
46102-0033	C-8
46102-0075	F-9
46102-0087	E-14
46102-0088	E-14
461S0600	B-7
480J1400	C-4
480J1800	B-12
480J2200	B-14
481J2200	C-6
49002-0003	B-3
49002-0016	B-3
49006-0011	F-7
49006-0027	F-7
49006-0033	F-7
49006-1088	F-4
49006-1088	F-6
49006-1242	F-4
49006-1242	F-6
49006-1344	F-3
49016-1044	F-3
49047-0003	C-3
49047-0004	C-3
49065-0017	C-11
49078-0003	B-8
49078-0056	B-8
49085-1070	D-3
49085-1073	D-3
49091-0001	F-3
49091-0001	F-5
49107-0058	B-7
49118-0065	B-10
49118-0066	B-10
49121-0001	C-8
49131-5095	D-3
49131-5096	D-3
51001-0110-6Z	F-11
51023-0025	F-11
51044-0023	F-11
51048-0009	F-11
510A3200	C-12
52005-1009	C-6
52010-0001	C-11
53066-0131-336	F-12
54010-0019	F-7
54011-0044	F-13
54012-0156	F-13
54017-0014	F-13
55020-0018	F-6
55020-0172-RZ	F-9
55020-0175	E-4
55020-0176	E-4
55020-0257	E-4
55020-0334-RZ	F-9
550D2015	F-5
550D3035	E-12
550S3020	E-7
56030-1228	G-5
56033-0049	C-6
56040-1157	G-5
56052-0886	G-6
56052-0887	G-6
56067-0970	G-6
56067-0975	G-6
56067-0976	G-6
56067-0977	G-6
56067-0978	G-6
56070-3799	G-5
58029-0003-266	G-7
59006-0011	B-6
59051-0006	B-12
59051-0009	C-11
59051-0033	B-12
59051-0061	C-14
59231-0019	F-11
59256-1065	C-14
600A0700	C-3
600A0800	B-12
600A1000	B-13
610A0408	C-11
610A0408	C-3
670B2012	E-13
670B2022	C-6
92004-1249	B-3
92005-0014	C-5
92005-0016	C-8
92005-0065	D-3
92009-1458	F-3
92009-1551	C-8
92009-1828	E-5
92009-1876	C-8
92009-1971	F-11
92009-1981	C-8
92009-1993	E-8
92015-1014	E-5
92015-1078	E-5
92015-1259	B-6
92015-1339	E-4
92015-1366	C-12
92015-1402	B-7
92015-1432	E-4
92015-1433	E-6
92015-1528	F-3
92015-1791	E-3
92015-1861	E-3
92015-1962	F-7
92019-008	F-7
92019-014	F-7
92022-054	B-11
92022-1028	F-5
92022-1088	F-7
92022-1380	C-14
92022-1601	F-5
92022-1614	B-12
92022-1690	F-11
92022-1737	F-7
92022-1814	F-3
92022-1827	C-4
92022-1829	E-7
92022-1944	B-12
92022-250	E-3
92022-271	B-12
92022-304	C-14
92022-304	C-5
92026-0089	F-9
92026-1217	C-4
92027-1966	F-11
92033-0018	C-8
92033-0039	F-9
92033-0040	E-14
92033-0041	E-14
92033-0042	E-14
92033-1039	C-11
92033-1041	E-12
92033-1161	B-5
92033-1270	B-14
92036-007	B-13
92037-1163	G-3
92037-1396	C-8
92037-1523	B-3
92037-1589	D-3
92042-007	B-3
92042-007	C-11
92042-007	C-14
92042-007	C-6
92043-0004	F-5
92043-0017	C-4
92043-0018	C-11
92043-0074	E-7
92043-1507	F-6
92043-1508	F-6
92043-1676	C-4
92043-4009	B-3
92043-4009	B-5
92043-4009	C-5
92045-0013	C-5
92045-0051	C-5
92045-0052	C-5
92045-0060	E-4
92045-1058	C-5
92045-1123	C-5
92045-1123	C-6
92045-1284	E-10
92045-1284	E-11
92045-1291	C-5
92045-1335	C-5
92045-1446	E-12
92046-0016	B-13
92046-1010	C-5
92046-1151	E-6
92046-1174	E-5
92046-1190	B-13
92046-1221	C-5
92046-1240	E-5
92046-1301	E-14
92046-1301	E-6
92049-0015	C-5
92049-0030	C-5
92049-0060	C-6
92049-0061	C-6
92049-0063	E-6
92049-0069	E-6
92049-0074	F-9
92049-0075	E-14
92049-013	C-6
92049-1196	B-3
92049-1262	C-5
92049-1349	B-8
92049-1387	B-12
92049-1403	E-10
92049-1403	E-11
92049-1519	C-6
92049-1614	E-12
92055-0010	C-14
92055-0066	C-8
92055-0090	F-9
92055-0091	F-9
92055-0092	F-9
92055-0093	F-9
92055-0094	F-9
92055-0095	F-9
92055-0098	E-14
92055-0099	E-14
92055-0100	E-14
92055-0101	E-14
92055-055	B-14
92055-086	B-10
92055-1004	C-8
92055-1011	C-6
92055-1146	C-6
92055-1167	C-8
92055-1223	C-8
92055-1308	C-14
92055-1352	B-4
92055-1671	C-8
92055-520	C-14
92057-0030	B-10
92057-1540	E-12
92058-1074	E-12
92062-0004	C-5
92063-1370	C-8
92063-1371	C-8
92063-1372	C-8
92063-1373	C-8
92063-1374	C-8
92063-1374	C-8
92063-1375	C-8
92063-1376	C-8
92063-1377	C-8
92063-1377	C-9
92063-1378	C-9
92063-1379	C-9
92063-1380	C-9
92063-1381	C-9
92064-1138	C-9
92064-1139	C-9
92064-1140	C-9
92064-1141	C-9
92064-1142	C-9
92064-1160	C-9
92065-058	C-3

Part No.	Grid No.
92065-058	C-5
92066-0024	B-3
92066-0039	C-6
92066-0059	C-6
92066-0060	C-6
92066-1012	B-3
92066-1437	C-5
92066-3777	B-3
92070-0019	C-13
92070-1266	C-13
92072-0045	F-11
92072-0055	F-7
92072-3874	C-5
92075-1138	C-13
92075-1787	F-11
92075-209	D-3
92081-020	B-12
92081-1092	C-9
92081-1620	C-9
92093-0059	F-9
92093-1046	C-9
92093-1434	E-5
92093-1435	E-5
92093-1436	E-6
92104-0004	G-4
92104-1063	G-4
92104-1064	G-4
92110-0004	G-4
92110-0005	G-4
92116-1069	E-3
92116-1076	E-3
92122-0016	E-4
92139-0014	B-13
92139-0159	B-14
92143-1087	E-8
92143-1196	F-14
92143-1307	E-4
92143-1676	E-5
92143-1867	E-5
92144-1721	F-4
92144-1752	E-13
92144-1761	C-11
92144-1819	F-6
92145-0048	B-3
92145-0051	B-12
92145-0052	C-4
92145-0154	C-4
92145-0162	B-12
92145-0164	C-9
92145-0166	C-9
92145-0167	C-9
92145-0198	E-7
92145-0199	E-7
92145-0351	B-13
92145-0365	B-10
92145-0453	C-4
92145-0463-8V	E-14
92145-0464-8V	E-14
92145-0465-8V	E-14
92145-0466-8V	E-14
92150-1170	E-4
92150-1214	E-4
92150-1426	C-9
92150-1451	F-3
92150-1452	F-3
92150-1474	F-7
92150-1691	F-4
92150-1692	F-6
92150-1760	E-3
92150-1811	F-6
92150-1845	E-3
92150-1858	B-12
92150-1978	E-12
92151-1133	E-5
92151-1134	C-6
92151-1135	C-6
92151-1199	C-14
92151-1233	E-4
92151-1233	G-3
92151-1234	E-5
92151-1423	C-14
92151-1423	E-8
92151-1449	B-7
92151-1537	F-8
92151-1652	B-12
92151-1654	F-5
92151-1799	F-4
92151-1822	B-7
92151-1930	B-10
92151-1930	C-4
92151-1930	C-6
92151-1930	F-11
92152-0028	E-11
92152-0135	F-8
92152-0141	C-9
92152-0261	C-13
92152-0275	B-6
92152-0292	E-5
92152-0324	E-11
92152-0377	B-14
92152-0379	D-3
92152-0425	E-6
92152-0443	B-14
92152-0459	E-4
92152-1139	E-6
92152-1346	F-11
92152-1422	E-8
92152-1427	E-12
92152-1472	E-10
92152-1473	E-12
92153-0338	B-3
92153-0339	B-3
92153-0341	B-3
92153-0502	E-8
92153-0503	D-3
92153-0503	E-4
92153-0503	F-13
92153-0503	G-7
92153-0517	F-4
92153-0572	B-10
92153-0617	F-8
92153-0620	E-5
92153-0623	B-6
92153-0626	C-13
92153-0627	F-3
92153-0627	F-5
92153-0638	C-9
92153-0639	C-9
92153-0653	E-7
92153-0668	C-6
92153-0695	F-3
92153-0696	C-14
92153-0697	C-6
92153-0749	C-11
92153-0773	F-8
92153-0825	C-4
92153-0838	E-7
92153-0844	C-14
92153-0860	C-14
92153-0863	B-6
92153-0863	F-14
92153-0864	D-3
92153-0878	C-5
92153-0918	B-10
92153-0936	F-6
92153-0936	F-9
92153-0937	E-6
92153-0938	E-6
92153-0939	E-6
92153-0950	E-8
92153-0974	E-13
92153-0990	F-9
92153-0994	E-4
92153-0997	E-4
92153-1123	B-13
92153-1181	B-4
92153-1308	F-12
92153-1359	E-4
92153-1386	E-6
92153-1395	F-9
92153-1397	F-10
92153-1398	F-10
92153-1399	F-10
92153-1506	F-8
92153-1643	E-6
92153-1652	E-4
92153-1669	C-4
92153-1701-10J	F-10
92153-1702	E-14
92153-1735	C-3
92153-1736	C-5
92153-1778	F-10
92153-1780-10J	F-10
92153-1784	C-6
92153-1790	E-3
92160-1913	F-13
92161-0073	F-14
92161-0113	F-8
92161-0213	B-6
92161-0254	F-11
92161-0255	F-11
92161-0329	E-14
92161-1184	E-10
92170-1077	D-3
92170-1204	C-9
92170-1226	F-8
92170-1283	D-3
92170-1514	B-3
92170-1582	C-9
92170-1938	C-5
92171-0149	C-9
92171-0195	C-6
92171-0246	C-9
92171-0253	F-13
92171-0295	C-6
92171-0314	B-3
92171-0372	D-3
92171-0481	F-3
92171-0482	F-3
92171-0491	B-7
92171-0506	F-10
92171-0579	C-5
92171-0614	F-13
92171-0614	G-3
92171-0651	B-6
92172-0069	F-8
92172-0087	C-11
92172-0119	E-5
92172-0125	F-8
92172-0127	C-9
92172-0128	C-9
92172-0129	C-9
92172-0248	B-12
92172-1064	F-5
92180-0167	B-8
92180-0168	B-8
92180-0169	B-8
92180-0170	B-8
92180-0171	B-8
92180-0172	B-8
92180-0173	B-8
92180-0174	B-8
92180-0175	B-8
92180-0176	B-8
92180-0177	B-8
92180-0178	B-8
92180-0179	B-8
92180-0180	B-8
92180-0181	B-8
92180-0182	B-8
92180-0183	B-8
92180-0184	B-8
92180-0185	B-8
92180-0186	B-8
92180-0187	B-8
92180-0188	B-8
92180-0189	B-8
92180-0190	B-8
92180-0191	B-8
92180-0192	B-8
92180-0193	B-8
92180-0194	B-8
92180-0195	B-9
92180-0196	B-9
92180-0197	B-9
92180-0198	B-9
92180-0199	B-9
92180-0200	B-9
92180-0201	B-9
92180-0202	B-9
92180-0203	B-9
92180-0204	B-9
92180-0205	B-9
92180-0206	B-9
92180-0207	B-9
92190-1488	E-13
92192-0083	C-9
92192-0084	C-10
92192-0085	C-10
92192-0102	C-5
92192-0167	D-3
92192-0332	C-10
92200-0027	B-13
92200-0028	B-14
92200-0029	C-4
92200-0045	B-13
92200-0075	B-12
92200-0087	C-5
92200-0098	B-13
92200-0107	C-10
92200-0120	C-5
92200-0154	E-13
92200-0154	E-3
92200-0190	C-14
92200-0271	D-3
92200-0285	E-5
92200-0287	B-14
92200-0300	F-8
92200-1339	B-3
92200-1434	C-10
92200-1548	B-13
92200-1623	E-12
92210-0065	E-11
92210-0066	E-3
92210-0159	E-12
92210-0167	F-8
92210-0268	F-10
92210-0270	E-14
92210-0271	E-14
92210-0272	E-14
92210-0285	E-5
92210-0350	B-11
92210-1080	E-4
92210-1080	E-6
92210-1184	E-6
92210-1207	B-13
92210-1352	E-8
92210-1411	E-12
99924-1354-01	G-8
99939-1314-01	G-8

Part No.	Grid No.	Part No.	Grid No.	Part No.	Grid No.	Part No.	Grid No.	Part No.	Grid No.	Part No.	Grid No.

99946-1036-01 .....G-8
99950-1041-01 .....G-8
99951-1027-01 .....G-8
99952-1011-01 .....G-8
99953-1033-01 .....G-8
99954-1042-01 .....G-8
99955-1025-01 .....G-8
99956-1009-01 .....G-8
99999-0023 .....B-3

Accessory....G-7
Air Cleaner....B-6
Brake Pedal....E-13
Cables....F-13
Camshaft(s)....B-10
Carburetor....C-10/C-7/C-8/C-9
Chassis Electrical Equipment....G-3
Clutch....B-13
Crankcase....C-5
Crankshaft....B-11
Cylinder....B-5
Cylinder Head....B-3
Cylinder Head Cover....B-4
Decals....G-6
Engine Cover(s)....C-6
Fenders....E-8
Footrests....E-7
Frame....E-3
Frame Fittings....E-4
Front Brake....F-4
Front Fork....F-10/F-9
Front Hub....E-11
Front Master Cylinder....F-3
Fuel Tank....F-11
Gear Change Drum....C-3
Gear Change Mechanism....C-4
Generator....C-12
Handlebar....F-7/F-8
Ignition System....C-13
Kickstarter Mechanism....B-12
Labels....G-5
Manual(EU)....G-8
Muffler(s)....B-7
Oil Pump....C-11
Owner’s Tools....G-4
Piston(s)....B-5
Radiator....D-3
Rear Brake....F-6
Rear Hub....E-12
Rear Master Cylinder....F-5
Seat....F-12
Shift Fork(s)....C-3
Shock Absorber(s)....E-14
Side Covers....F-14
Stand(s)....E-9
Suspension....E-6
Swingarm....E-5
Tensioner....B-10
Tires....E-10
Transmission....B-14
Valve(s)....B-8/B-9
Water Pump....C-14

Accessory....G-7
Air Cleaner....B-6
Brake Pedal....E-13
Cables....F-13
Camshaft(s)....B-10
Carburetor....C-10/C-7/C-8/C-9
Chassis Electrical Equipment....G-3
Clutch....B-13
Crankcase....C-5
Crankshaft....B-11
Cylinder....B-5
Cylinder Head....B-3
Cylinder Head Cover....B-4
Decals....G-6
Engine Cover(s)....C-6
Fenders....E-8
Footrests....E-7
Frame....E-3
Frame Fittings....E-4
Front Brake....F-4
Front Fork....F-10/F-9
Front Hub....E-11
Front Master Cylinder....F-3
Fuel Tank....F-11
Gear Change Drum....C-3
Gear Change Mechanism....C-4
Generator....C-12
Handlebar....F-7/F-8
Ignition System....C-13
Kickstarter Mechanism....B-12
Labels....G-5
Manual(EU)....G-8
Muffler(s)....B-7
Oil Pump....C-11
Owner’s Tools....G-4
Piston(s)....B-5
Radiator....D-3
Rear Brake....F-6
Rear Hub....E-12
Rear Master Cylinder....F-5
Seat....F-12
Shift Fork(s)....C-3
Shock Absorber(s)....E-14
Side Covers....F-14
Stand(s)....E-9
Suspension....E-6
Swingarm....E-5
Tensioner....B-10
Tires....E-10
Transmission....B-14
Valve(s)....B-8/B-9
Water Pump....C-14

Accessory....G-7
Air Cleaner....B-6
Brake Pedal....E-13
Cables....F-13
Camshaft(s)....B-10
Carburetor....C-10/C-7/C-8/C-9
Chassis Electrical Equipment....G-3
Clutch....B-13
Crankcase....C-5
Crankshaft....B-11
Cylinder....B-5
Cylinder Head....B-3
Cylinder Head Cover....B-4
Decals....G-6
Engine Cover(s)....C-6
Fenders....E-8
Footrests....E-7
Frame....E-3
Frame Fittings....E-4
Front Brake....F-4
Front Fork....F-10/F-9
Front Hub....E-11
Front Master Cylinder....F-3
Fuel Tank....F-11
Gear Change Drum....C-3
Gear Change Mechanism....C-4
Generator....C-12
Handlebar....F-7/F-8
Ignition System....C-13
Kickstarter Mechanism....B-12
Labels....G-5
Manual(EU)....G-8
Muffler(s)....B-7
Oil Pump....C-11
Owner’s Tools....G-4
Piston(s)....B-5
Radiator....D-3
Rear Brake....F-6
Rear Hub....E-12
Rear Master Cylinder....F-5
Seat....F-12
Shift Fork(s)....C-3
Shock Absorber(s)....E-14
Side Covers....F-14
Stand(s)....E-9
Suspension....E-6
Swingarm....E-5
Tensioner....B-10
Tires....E-10
Transmission....B-14
Valve(s)....B-8/B-9
Water Pump....C-14

Accessory....G-7
Air Cleaner....B-6
Brake Pedal....E-13
Cables....F-13
Camshaft(s)....B-10
Carburetor....C-10/C-7/C-8/C-9
Chassis Electrical Equipment....G-3
Clutch....B-13
Crankcase....C-5
Crankshaft....B-11
Cylinder....B-5
Cylinder Head....B-3
Cylinder Head Cover....B-4
Decals....G-6
Engine Cover(s)....C-6
Fenders....E-8
Footrests....E-7
Frame....E-3
Frame Fittings....E-4
Front Brake....F-4
Front Fork....F-10/F-9
Front Hub....E-11
Front Master Cylinder....F-3
Fuel Tank....F-11
Gear Change Drum....C-3
Gear Change Mechanism....C-4
Generator....C-12
Handlebar....F-7/F-8
Ignition System....C-13
Kickstarter Mechanism....B-12
Labels....G-5
Manual(EU)....G-8
Muffler(s)....B-7
Oil Pump....C-11
Owner’s Tools....G-4
Piston(s)....B-5
Radiator....D-3
Rear Brake....F-6
Rear Hub....E-12
Rear Master Cylinder....F-5
Seat....F-12
Shift Fork(s)....C-3
Shock Absorber(s)....E-14
Side Covers....F-14
Stand(s)....E-9
Suspension....E-6
Swingarm....E-5
Tensioner....B-10
Tires....E-10
Transmission....B-14
Valve(s)....B-8/B-9
Water Pump....C-14

Accessory....G-7
Air Cleaner....B-6
Brake Pedal....E-13
Cables....F-13
Camshaft(s)....B-10
Carburetor....C-10/C-7/C-8/C-9
Chassis Electrical Equipment....G-3
Clutch....B-13
Crankcase....C-5
Crankshaft....B-11
Cylinder....B-5
Cylinder Head....B-3
Cylinder Head Cover....B-4
Decals....G-6
Engine Cover(s)....C-6
Fenders....E-8
Footrests....E-7
Frame....E-3
Frame Fittings....E-4
Front Brake....F-4
Front Fork....F-10/F-9
Front Hub....E-11
Front Master Cylinder....F-3
Fuel Tank....F-11
Gear Change Drum....C-3
Gear Change Mechanism....C-4
Generator....C-12
Handlebar....F-7/F-8
Ignition System....C-13
Kickstarter Mechanism....B-12
Labels....G-5
Manual(EU)....G-8
Muffler(s)....B-7
Oil Pump....C-11
Owner’s Tools....G-4
Piston(s)....B-5
Radiator....D-3
Rear Brake....F-6
Rear Hub....E-12
Rear Master Cylinder....F-5
Seat....F-12
Shift Fork(s)....C-3
Shock Absorber(s)....E-14
Side Covers....F-14
Stand(s)....E-9
Suspension....E-6
Swingarm....E-5
Tensioner....B-10
Tires....E-10
Transmission....B-14
Valve(s)....B-8/B-9
Water Pump....C-14

Accessory....G-7
Air Cleaner....B-6
Brake Pedal....E-13
Cables....F-13
Camshaft(s)....B-10
Carburetor....C-10/C-7/C-8/C-9
Chassis Electrical Equipment....G-3
Clutch....B-13
Crankcase....C-5
Crankshaft....B-11
Cylinder....B-5
Cylinder Head....B-3
Cylinder Head Cover....B-4
Decals....G-6
Engine Cover(s)....C-6
Fenders....E-8
Footrests....E-7
Frame....E-3
Frame Fittings....E-4
Front Brake....F-4
Front Fork....F-10/F-9
Front Hub....E-11
Front Master Cylinder....F-3
Fuel Tank....F-11
Gear Change Drum....C-3
Gear Change Mechanism....C-4
Generator....C-12
Handlebar....F-7/F-8
Ignition System....C-13
Kickstarter Mechanism....B-12
Labels....G-5
Manual(EU)....G-8
Muffler(s)....B-7
Oil Pump....C-11
Owner’s Tools....G-4
Piston(s)....B-5
Radiator....D-3
Rear Brake....F-6
Rear Hub....E-12
Rear Master Cylinder....F-5
Seat....F-12
Shift Fork(s)....C-3
Shock Absorber(s)....E-14
Side Covers....F-14
Stand(s)....E-9
Suspension....E-6
Swingarm....E-5
Tensioner....B-10
Tires....E-10
Transmission....B-14
Valve(s)....B-8/B-9
Water Pump....C-14