Kawasaki

MICRO-K

PARTS CATALOG

Year & Model	**’12 KX85ACF**	**’12 KX85BCF**
Color	1. Lime Green (777)	1. Lime Green (777)
VIN No. Range	JKBKX085AAA055001 ~	JKBKX085BBA033001 ~
	JKBKXFAC√CA055001 ~ (Australia only)	JKBKXFBC√CA033001 ~ (Australia only)
Engine No. Range	KX085AE000001 ~	KX085AE000001 ~

’12 KX85 ACF/BCF

(KX85/KX85-II)

Publications A-2
Model Identification A-4
Engine B-1
Chassis D-1

© Kawasaki Heavy Industries, Ltd. 2011

Engine No. Location:
RH crankcase, below carburetor

Year & Model	Owner’s Manual	A&P Manual		Service Manual		Microfiche
		General	Supplement	Basic	Supplement	
2012 KX85ACF	99976-1663(EN/FR/DE) 99976-1664(IT/ES/NL) 99986-1644(Australia only)	99939-1318-01		99924-1265-12		99912-1730-01
2012 KX85BCF	See above	See above		See above		See above

PARTS LIST INFORMATION

This parts catalog lists parts and sub-assemblies provided as spare parts.
When it becomes necessary to replace parts always use KAWASAKI GENUINE PARTS. Strict inspection assures quality and performance of KAWASAKI GENUINE PARTS.

1. HOW TO PLACE AN ORDER FOR PART

When ordering parts be sure to use the catalog for the correct model and year of the vehicle. Include the following items exactly as listed in this catalog on your parts order.

Part Number
Part Name
Color Code
Specify the color using both color code (which is part of the part number) and name when ordering painted parts.
Example: 51001-5074-H8 TANK-COMP-FUEL,EBONY

Parts not shown disassembled in the illustrations of this parts catalog are not sold separately; only the complete units or next higher assemblies illustrated, are supplied, as spare parts.

2. EXPLANATION OF PARTS CATALOG FORMAT

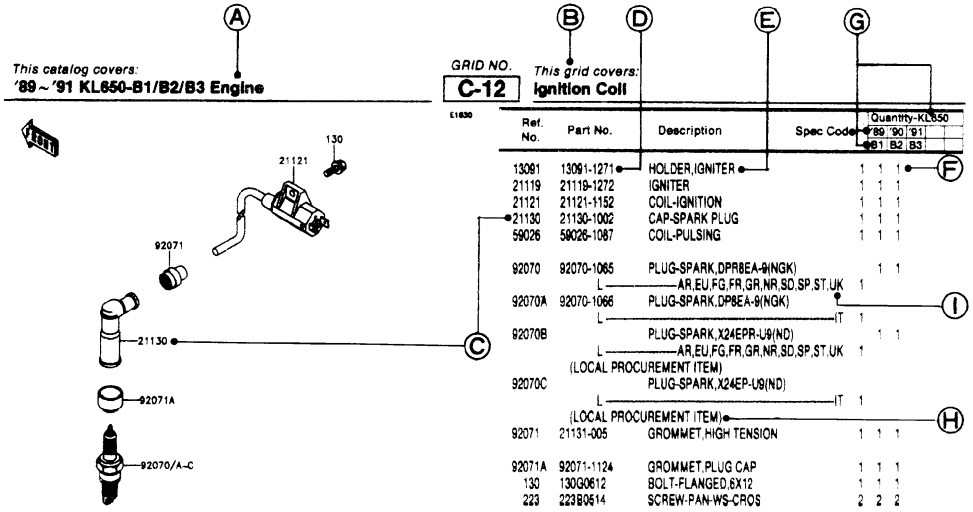

A. Year & Model Title
This title describes the year(s) and model(s) contained in this catalog.

B. Part Group Title
A representative name for the group of parts illustrated on this page.

C. Referernce Number
The reference number is listed on the illustration and parts list. It is the link between the illustration and the parts list.

D. Part Number
The number assigned to a part for the purpose of parts ordering.

1) Part Number (New Structure)
00000 – 0000 – 00 or 00000 – 0000 – 000
Color Code
Production Number
Function Code

(Old Structure)
00000 – 000 – 00

2) Standard Hardware Number
000 0 0000
Size Number
Material or Surface Treatment Code (Alphabet)
Item Number

E. Description
Describes the main function of the part and includes data such as size, number of teeth, color,etc.

List of Abbreviations

(+)	Plus	HEX	Hexagonal	REF	Reference
(-)	Minus	ID =	Inside Diameter	RH	Right Hand
&	And	KPH	Killometers Per Hour	RPM	Revolutions Per Minute
2ND	Second	L	Link	RR	Rear
3RD	Third	L =	Length	STD	Standard
4TH	Fourth	L/	Less	T	Teeth
AR	As Required	LH	Left Hand	T =	Thickness
ASSY	Assembly	LWR	Lower	U/S	Under Size
CA	Cut Away	MM	Millimeter	UPP	Upper
CNT	Center	MPH	Miles Per Hour	V	Volt
COMP	Complete	NA	Not Available	W	Watt
D	Degree	O/S	Over Size	W/	With
FR	Front	OD =	Outside Diameter	WD	With Decal
G	Gram	PR	Ply Rating	WOD	Without Decal

F. Quantity
Specifies how many of a part are required at the indicated position on the illustration.

G. Year & Model
Indicates which parts are used for a specific vehicle year and model.

H. Additional Information
Additional Information is shown as follows:
1) (OPTION) Part is not installed as original equipment, but is available separately.
2) (RACING USE ONLY) Part is to be used for closed course racing only on this vehicle.
3) (OFF-ROAD USE ONLY) Part is for off-road use only this vehicle.
4) (LOCAL PROCUREMENT ITEM) Part is obtainable from a local source. No part number is listed.
5) Technical relationships between old part numbers and new part numbers are shown as follows:
INTERCHANGE - Old part or new part can be used.
SUBSTITUTE - New part replaces old part. Old part cannot be used in place of new part.
6) Mid-Year part number changes on a vehicle are noted by engine or frame number references.

(- KZ400DE001181)	Affected units are from beginning of model year production up to and including this engine number.
(KZ400D-008111 -)	Affected units are from this frame number to the end of model year production.
(KZ400DE008181 - KZ400DE018888)	Affected units are in this engine number range.

I. Specification Code
Identifies the specification of the vehicle for which the part applies. If no spec code is listed, that means the part is used for all specifications.

Spec Code	Specification	’12 ACF	’12 BCF			
AS	Australia	O	O			
EU	Europe(General)	O	O			

KX85ACF

Left Side View

Right Side View

KX85BCF

Left Side View

Right Side View

’12 KX85ACF

O : Applicable ×: Not applicable

Color: Lime Green (777) **(1)**

Part No.	Description	Spec.Code AS	EU											
13070-0049-6D	GUIDE,PROTECTOR,LH,BLACK	O	O											
13070-0050-6D	GUIDE,PROTECTOR,RH,BLACK	O	O											
14037-1249-6D	SCREEN,RH,BLACK	O	O											
14037-1282-6D	SCREEN,LH,BLACK	O	O											
14090-1860-6D	COVER,BRAKE HOSE,BLACK	O	O											
32160-1486-18R	FRAME-COMP,DOWNTUBE,RH,BLACK	O	O											
32160-1667-18R	FRAME-COMP,MAIN,F.S.BLACK	O	O											
33001-1542-458	ARM-COMP-SWING,P.SILVER	O	O											
34024-1404-458	STAND-SIDE,P.SILVER	O	O											
34028-1498-CE	STEP,LH,SILVER	O	O											
34028-1499-CE	STEP,RH,SILVER	O	O											
35004-0028-290	FENDER-FRONT,L.GREEN	O	O											
35022-1353-290	FENDER-COMP-REAR,L.GREEN	O	O											
36001-1584-266	COVER-SIDE,LH,S.WHITE	O	O											
36001-1585-266	COVER-SIDE,RH,S.WHITE	O	O											
41025-0131-WC	RIM,FR,1.40X17,BLACK	O	O											
41025-0132-WC	RIM,RR,1.60X14,BLACK	O	O											
41090-0101-WC	WHEEL,FR,1.40X17,BLACK	O	O											
41090-0102-WC	WHEEL,RR,1.60X14,BLACK	O	O											
43089-0008-829	CYLINDER-SHOCKABSORBER,GOLD	O	O											
44008-1041-828	PIPE-FORK OUTER,GOLD	O	O											
44029-0056-KW	SEAT-FORK SPRING,BLUE	O	O											
44037-0032-21	HOLDER-FORK UNDER,F.BLACK	O	O											
44039-0023-21	HOLDER-FORK UPPER,F.BLACK	O	O											
46003-0027-18R	HANDLE,F.S.BLACK	O	O											
46012-0011-21	HOLDER-HANDLE,UPP,F.BLACK	O	O											
49089-1139-290	SHROUD-ENGINE,RH,L.GREEN	O	O											
49089-1146-290	SHROUD-ENGINE,LH,L.GREEN	O	O											
51001-1677-6Z	TANK-COMP-FUEL,F.BLACK	O	O											
53066-0093-336	SEAT-ASSY,GREEN/BLACK	O	O											

’12 KX85ACF

O : Applicable ×: Not applicable

Color: Lime Green (777) **(2)**

Part No.	Description	Spec.Code AS	EU											
55020-1247-6D	GUARD,CALIPER,BLACK	O	O											
55020-1611-6D	GUARD,FORK,LH,BLACK	O	O											
55020-1612-6D	GUARD,FORK,RH,BLACK	O	O											
58029-1082-266	PLATE-NUMBER,S.WHITE	O	O											
92144-1570-17D	SPRING,SHOCK,K=45.1N/MM,BLACK	O	O											
92144-1571-17D	SPRING,SHOCK,K=49.0N/MM,BLACK	O	O											
92144-1945-17D	SPRING,SHOCK,K=47.0N/MM,BLACK	O	O											
92145-1371-17D	SPRING,SHOCK,K=43.1N/MM,BLACK	O	O											

’12 KX85BCF

O : Applicable ×: Not applicable

Color: Lime Green (777) (1)

Part No.	Description	Spec.Code AS	EU											
13070-0049-6D	GUIDE,PROTECTOR,LH,BLACK	O	O											
13070-0050-6D	GUIDE,PROTECTOR,RH,BLACK	O	O											
14037-1249-6D	SCREEN,RH,BLACK	O	O											
14037-1282-6D	SCREEN,LH,BLACK	O	O											
14090-1860-6D	COVER,BRAKE HOSE,BLACK	O	O											
32160-1486-18R	FRAME-COMP,DOWNTUBE,RH,BLACK	O	O											
32160-1673-18R	FRAME-COMP,MAIN,F.S.BLACK	O	O											
33001-1543-458	ARM-COMP-SWING,P.SILVER	O	O											
34024-1404-458	STAND-SIDE,P.SILVER	O	O											
34028-1498-CE	STEP,LH,SILVER	O	O											
34028-1499-CE	STEP,RH,SILVER	O	O											
35004-0028-290	FENDER-FRONT,L.GREEN	O	O											
35022-1353-290	FENDER-COMP-REAR,L.GREEN	O	O											
36001-1584-266	COVER-SIDE,LH,S.WHITE	O	O											
36001-1585-266	COVER-SIDE,RH,S.WHITE	O	O											
41025-0133-WC	RIM,FR,1.40X19,BLACK	O	O											
41025-0134-WC	RIM,RR,1.85X16,BLACK	O	O											
41090-0103-WC	WHEEL,FR,1.40X19,BLACK	O	O											
41090-0104-WC	WHEEL,RR,1.85X16,BLACK	O	O											
43089-0008-829	CYLINDER-SHOCKABSORBER,GOLD	O	O											
44008-1041-828	PIPE-FORK OUTER,GOLD	O	O											
44029-0056-KW	SEAT-FORK SPRING,BLUE	O	O											
44037-0032-21	HOLDER-FORK UNDER,F.BLACK	O	O											
44039-0023-21	HOLDER-FORK UPPER,F.BLACK	O	O											
46003-0027-18R	HANDLE,F.S.BLACK	O	O											
46012-0011-21	HOLDER-HANDLE,UPP,F.BLACK	O	O											
49089-1139-290	SHROUD-ENGINE,RH,L.GREEN	O	O											
49089-1146-290	SHROUD-ENGINE,LH,L.GREEN	O	O											
51001-1677-6Z	TANK-COMP-FUEL,F.BLACK	O	O											
53066-0093-336	SEAT-ASSY,GREEN/BLACK	O	O											

’12 KX85BCF

O : Applicable ×: Not applicable

Color: Lime Green (777) **(2)**

Part No.	Description	Spec.Code AS	EU											
55020-1247-6D	GUARD,CALIPER,BLACK	O	O											
55020-1611-6D	GUARD,FORK,LH,BLACK	O	O											
55020-1612-6D	GUARD,FORK,RH,BLACK	O	O											
58029-1082-266	PLATE-NUMBER,S.WHITE	O	O											
92144-1570-17D	SPRING,SHOCK,K=45.1N/MM,BLACK	O	O											
92144-1571-17D	SPRING,SHOCK,K=49.0N/MM,BLACK	O	O											
92144-1945-17D	SPRING,SHOCK,K=47.0N/MM,BLACK	O	O											
92145-1371-17D	SPRING,SHOCK,K=43.1N/MM,BLACK	O	O											

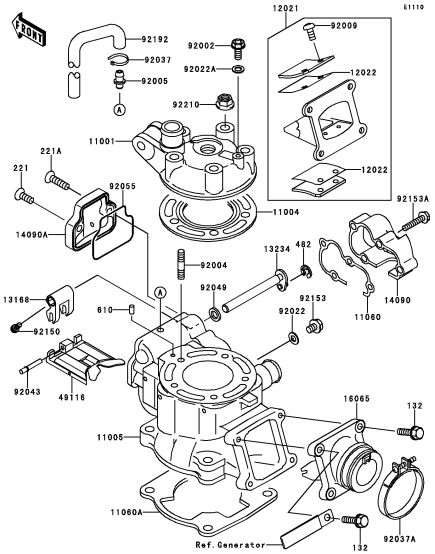

B-3 **Cylinder Head/Cylinder**

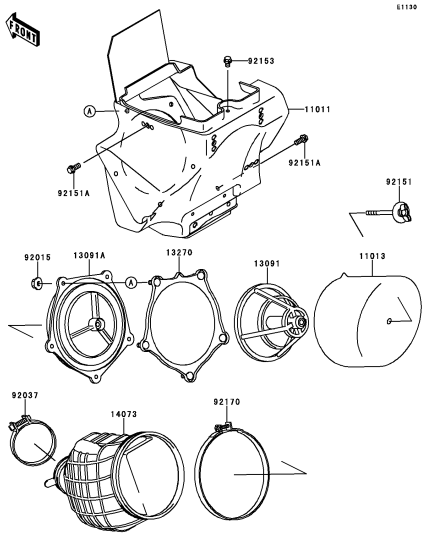

B-4 **Air Cleaner**

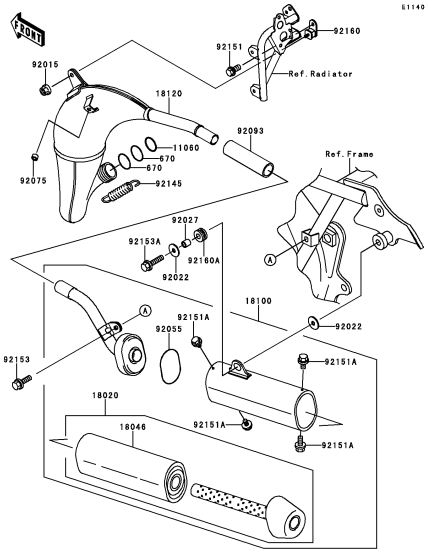

B-5 **Muffler(s)**

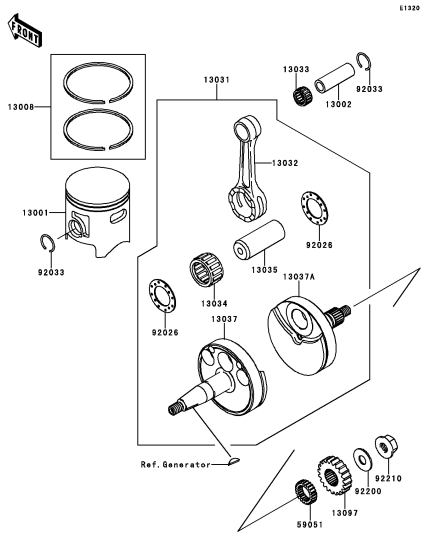

B-6 **Crankshaft/Piston(s)**

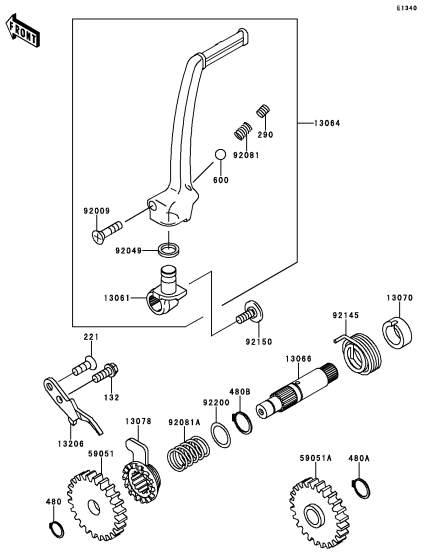

B-7 **Kickstarter Mechanism**

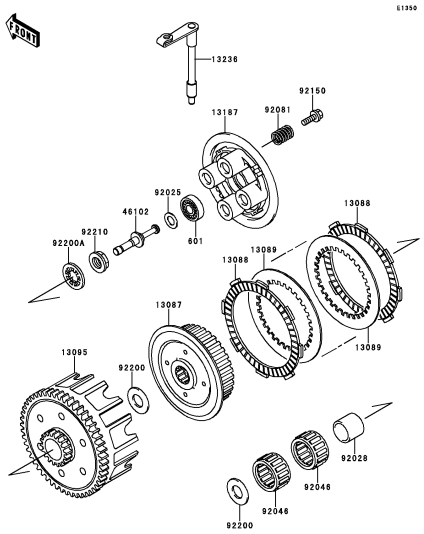

B-8 **Clutch**

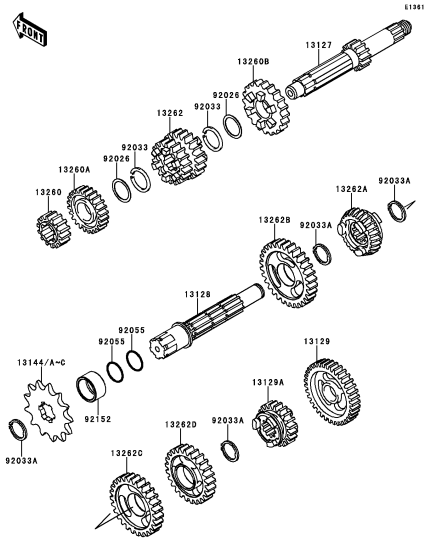

B-9 **Transmission**

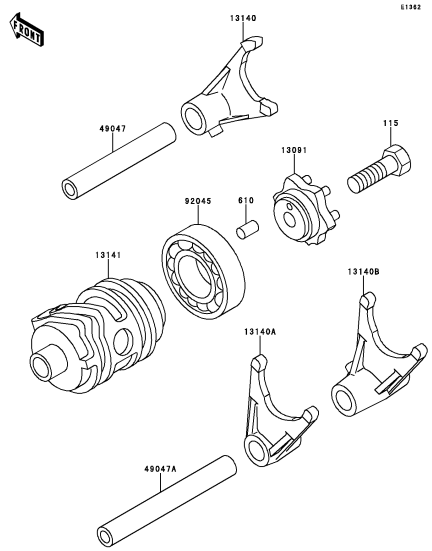

B-10 **Gear Change Drum/Shift Fork(s)**

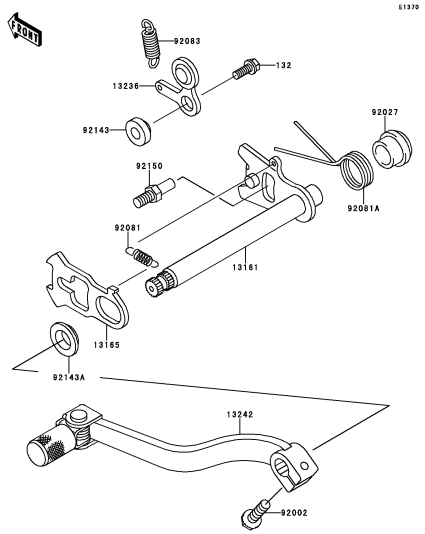

B-11 **Gear Change Mechanism**

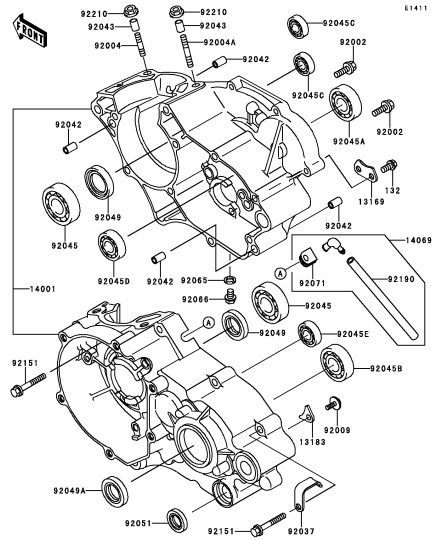

B-12 **Crankcase**

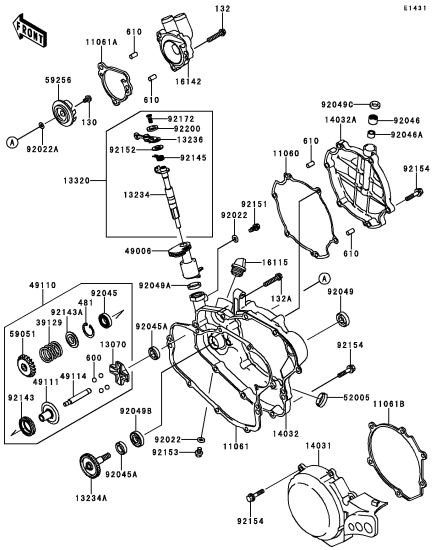

B-13 **Engine Cover(s)(1/2)**

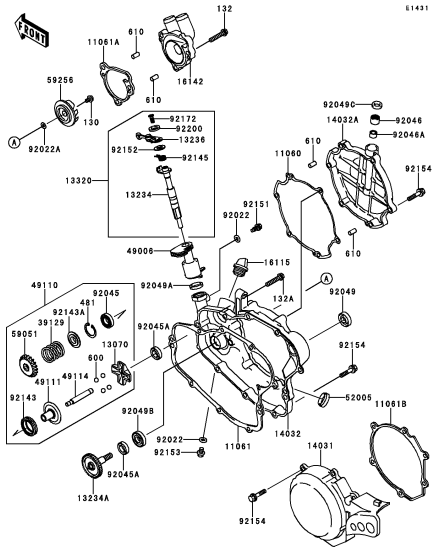

B-14 **Engine Cover(s)(2/2)**

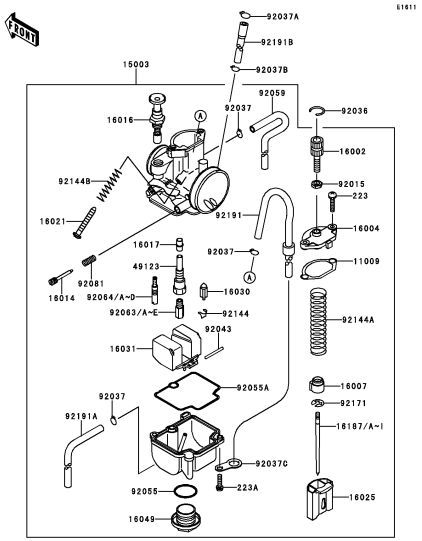

C-3 **Carburetor(1/2)**

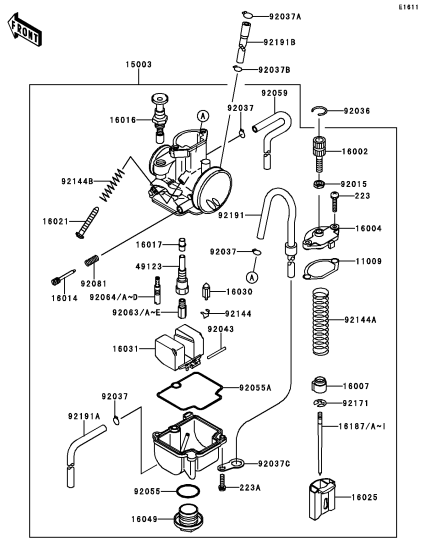

C-4 **Carburetor(2/2)**

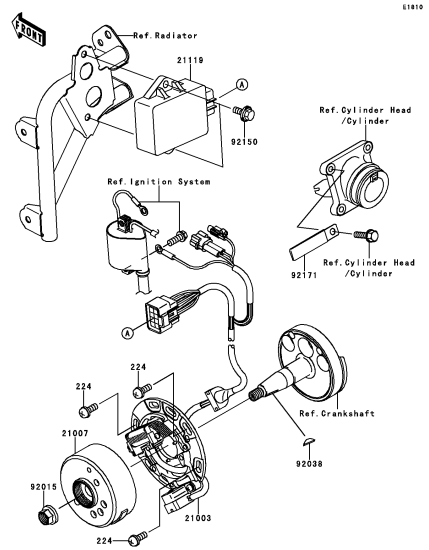

C-5 **Generator**

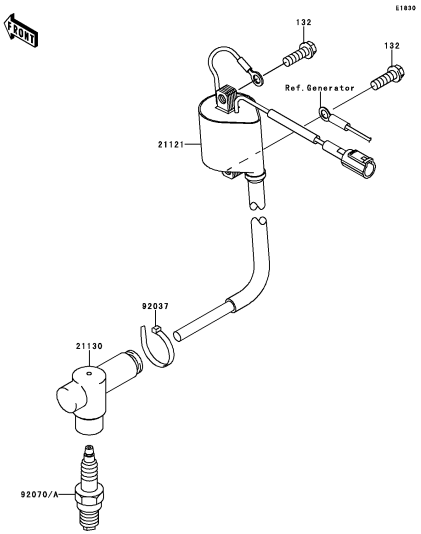

C-6 **Ignition System**

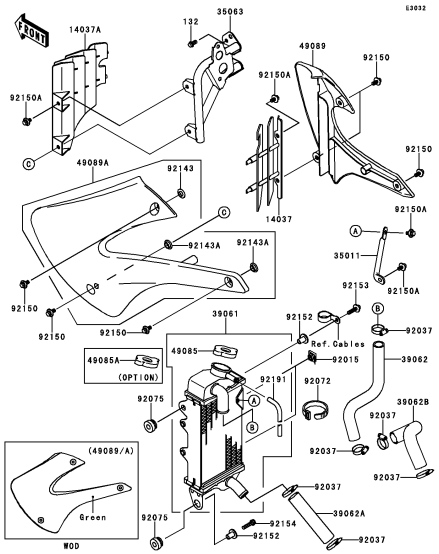

C-7 **Radiator**

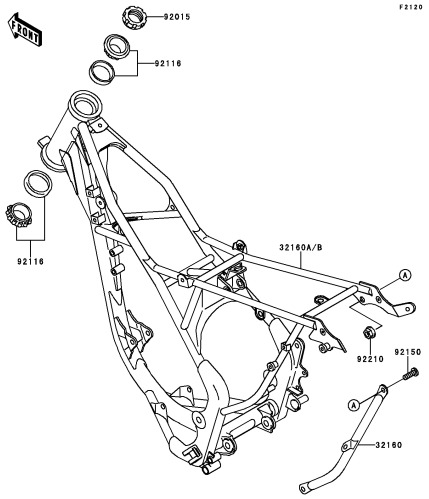

D-3 **Frame**

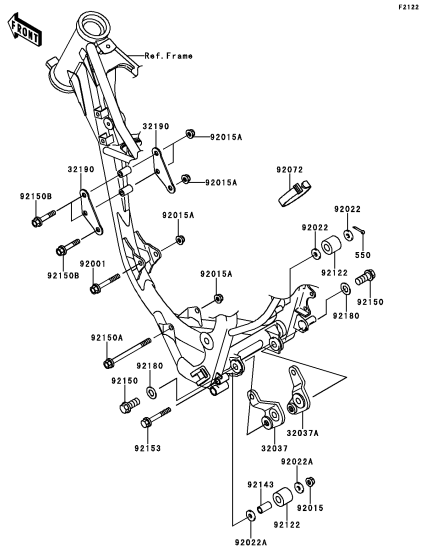

D-4 **Engine Mount**

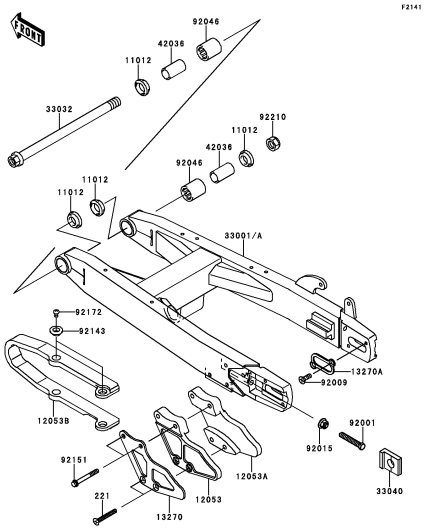

D-5 **Swingarm**

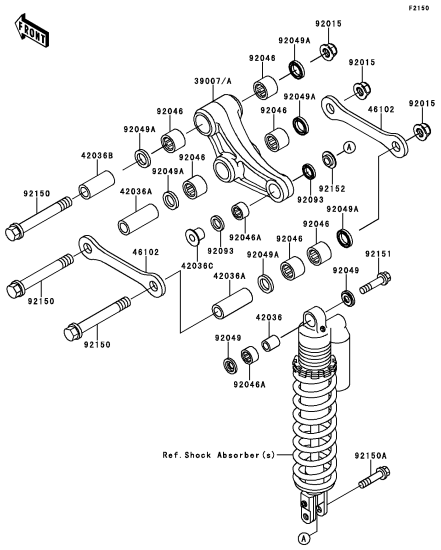

D-6 **Suspension**

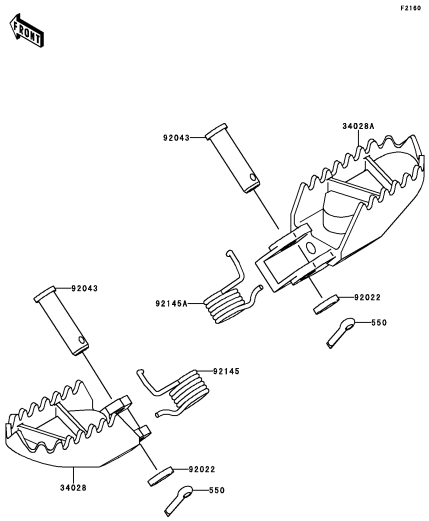

D-7 **Footrests**

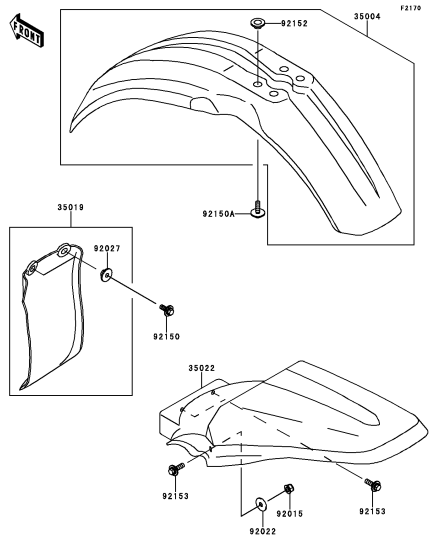

D-8 **Fenders**

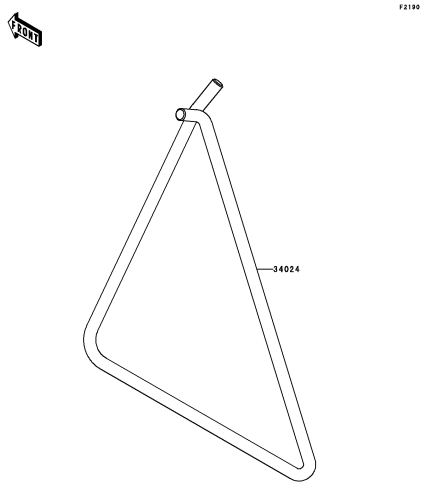

D-9 **Stand(s)**

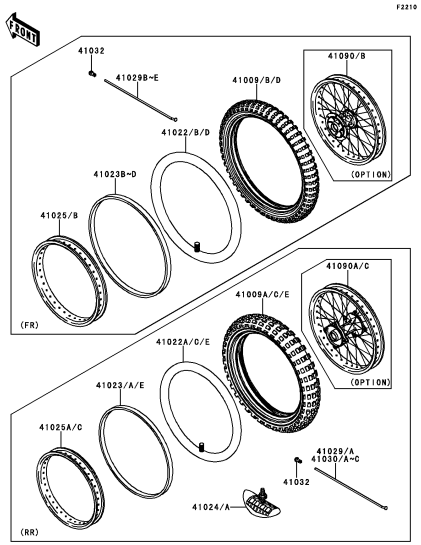

D-10 **Tires(1/2)**

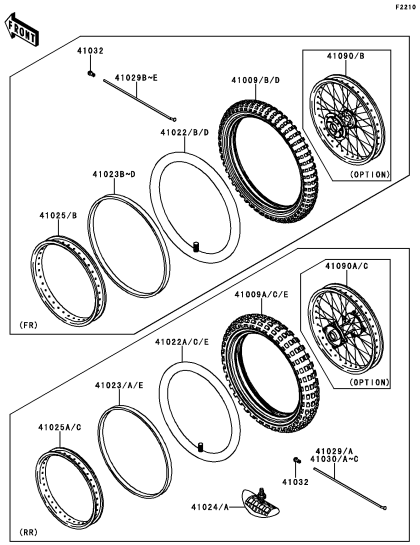

D-11 **Tires(2/2)**

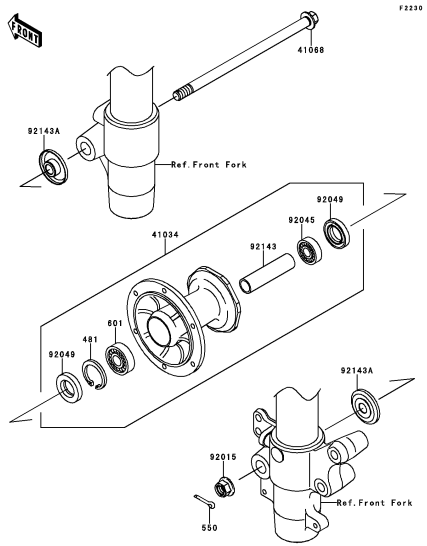

D-12 **Front Hub**

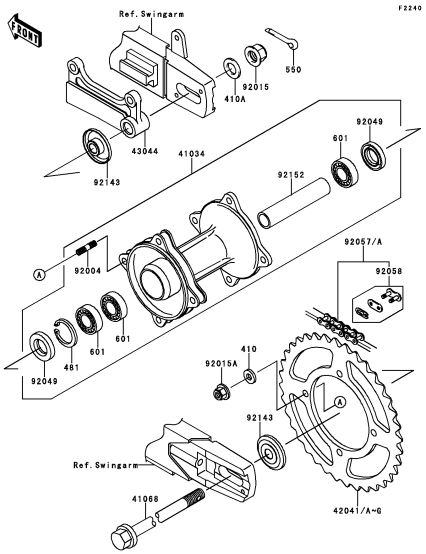

D-13 **Rear Hub**

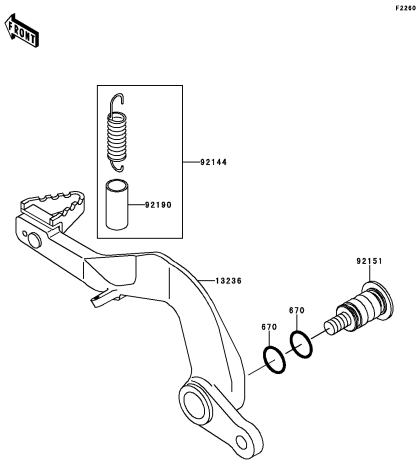

D-14 **Brake Pedal**

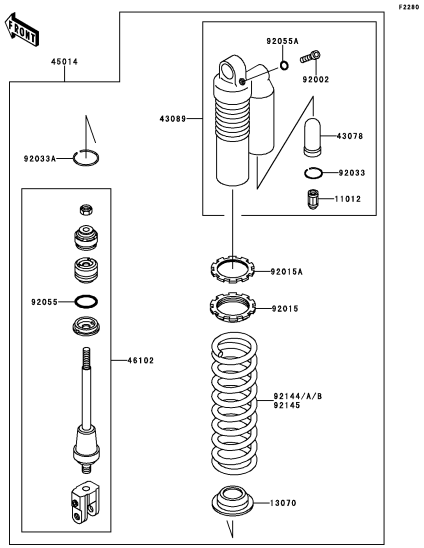

E-3 **Shock Absorber(s)**

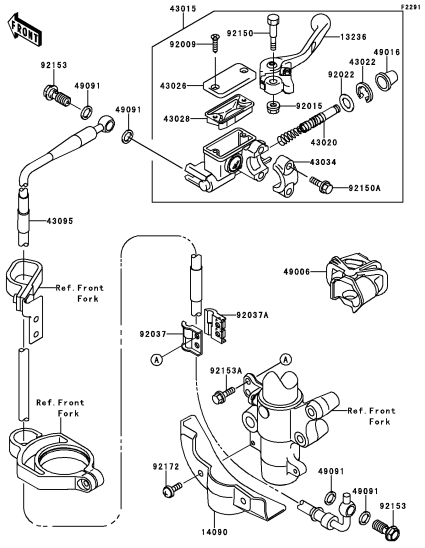

E-4 **Front Master Cylinder**

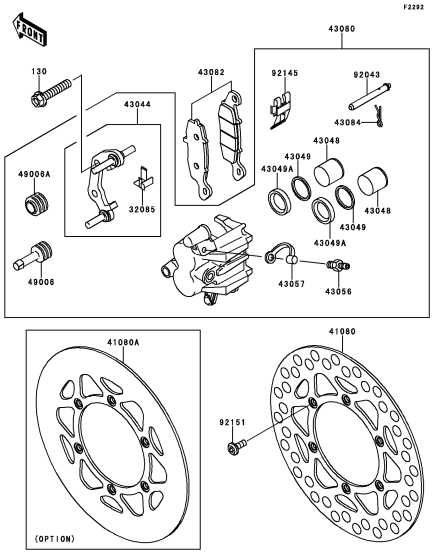

E-5 **Front Brake**

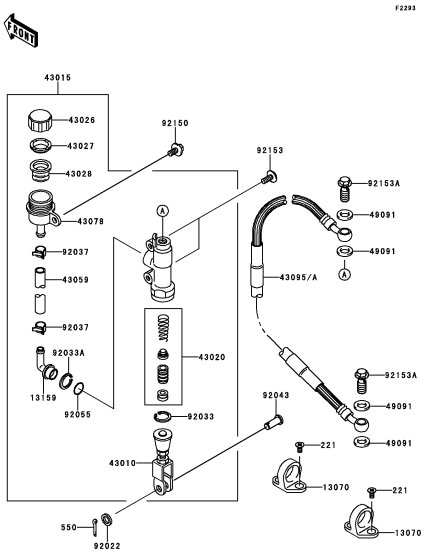

E-6 **Rear Master Cylinder**

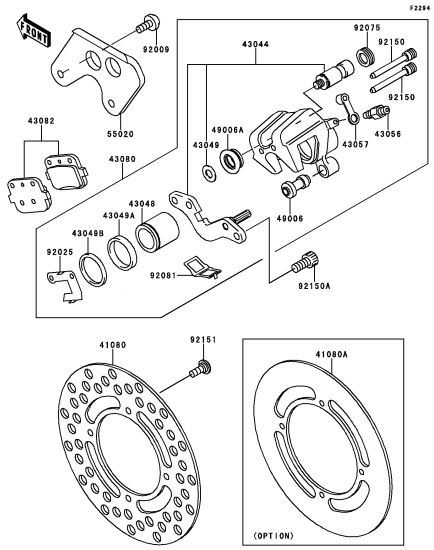

E-7 **Rear Brake**

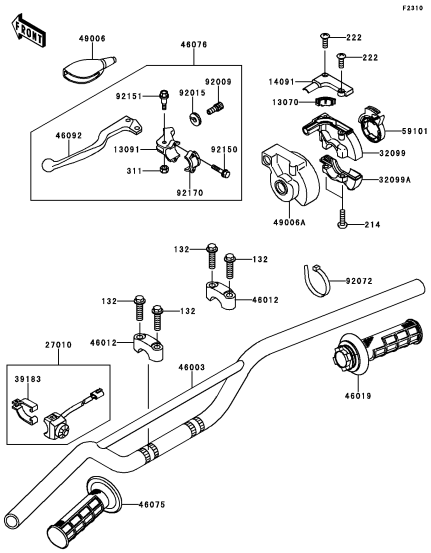

E-8 **Handlebar**

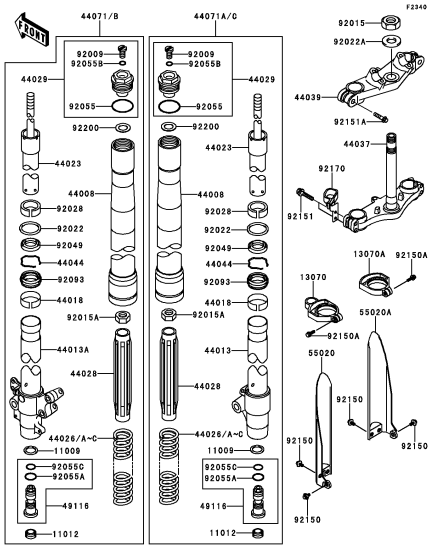

E-9 **Front Fork(1/2)**

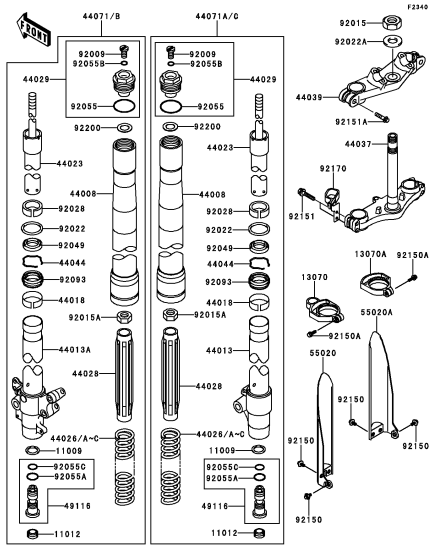

E-10 **Front Fork(2/2)**

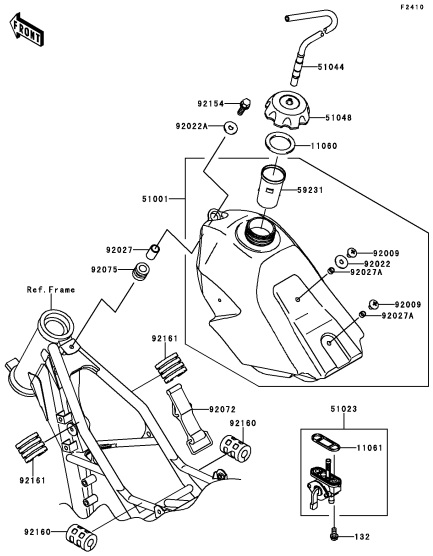

E-11 **Fuel Tank**

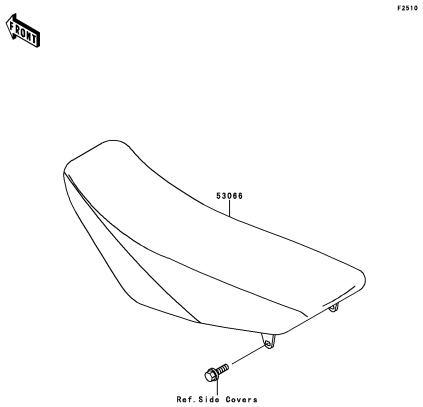

E-12 **Seat**

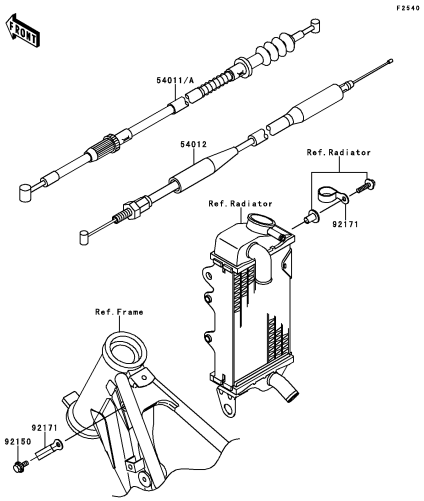

E-13 **Cables**

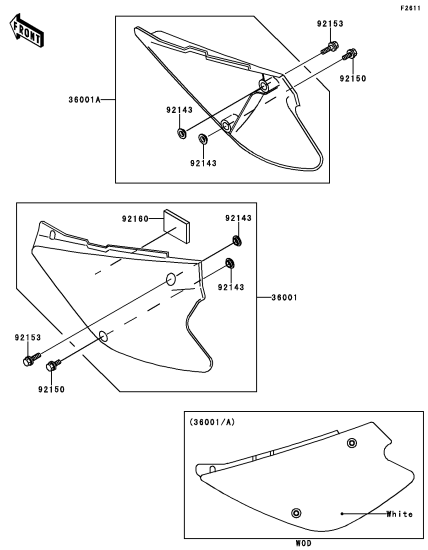

E-14 **Side Covers**

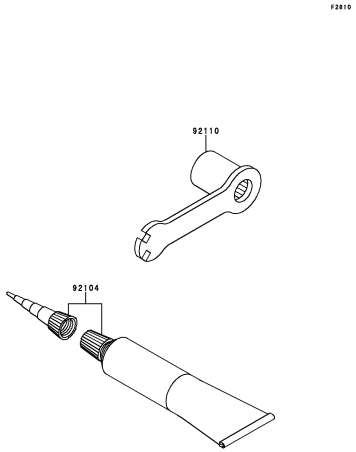

F-3 **Owner’s Tools**

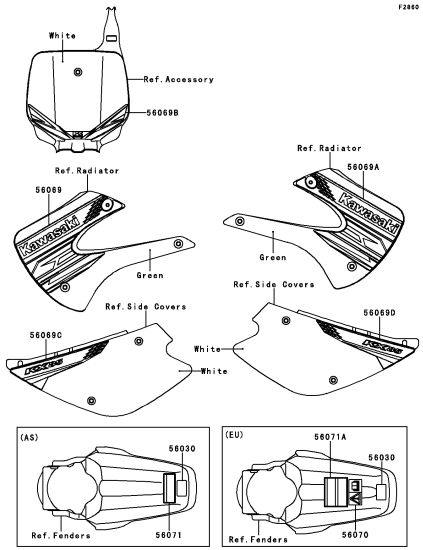

F-4 **Labels**

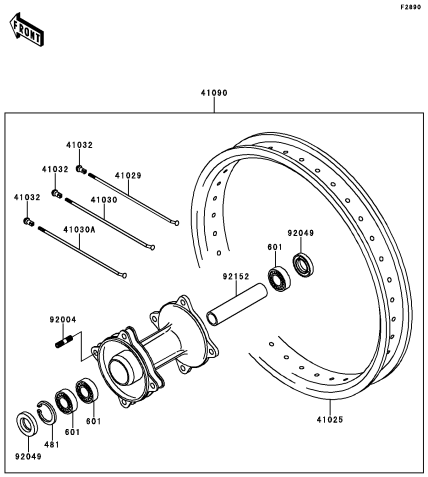

F-5 **Optional Parts(ACF)**

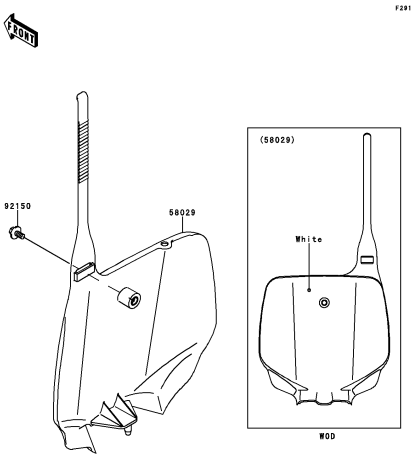

F-6 **Accessory**

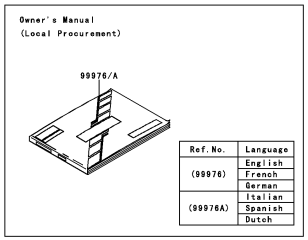

F-7 **Manual(EU)**

This catalog covers:

’12 KX85 ACF/BCF Engine

GRID NO. **B-3**

This grid covers:

Cylinder Head/Cylinder

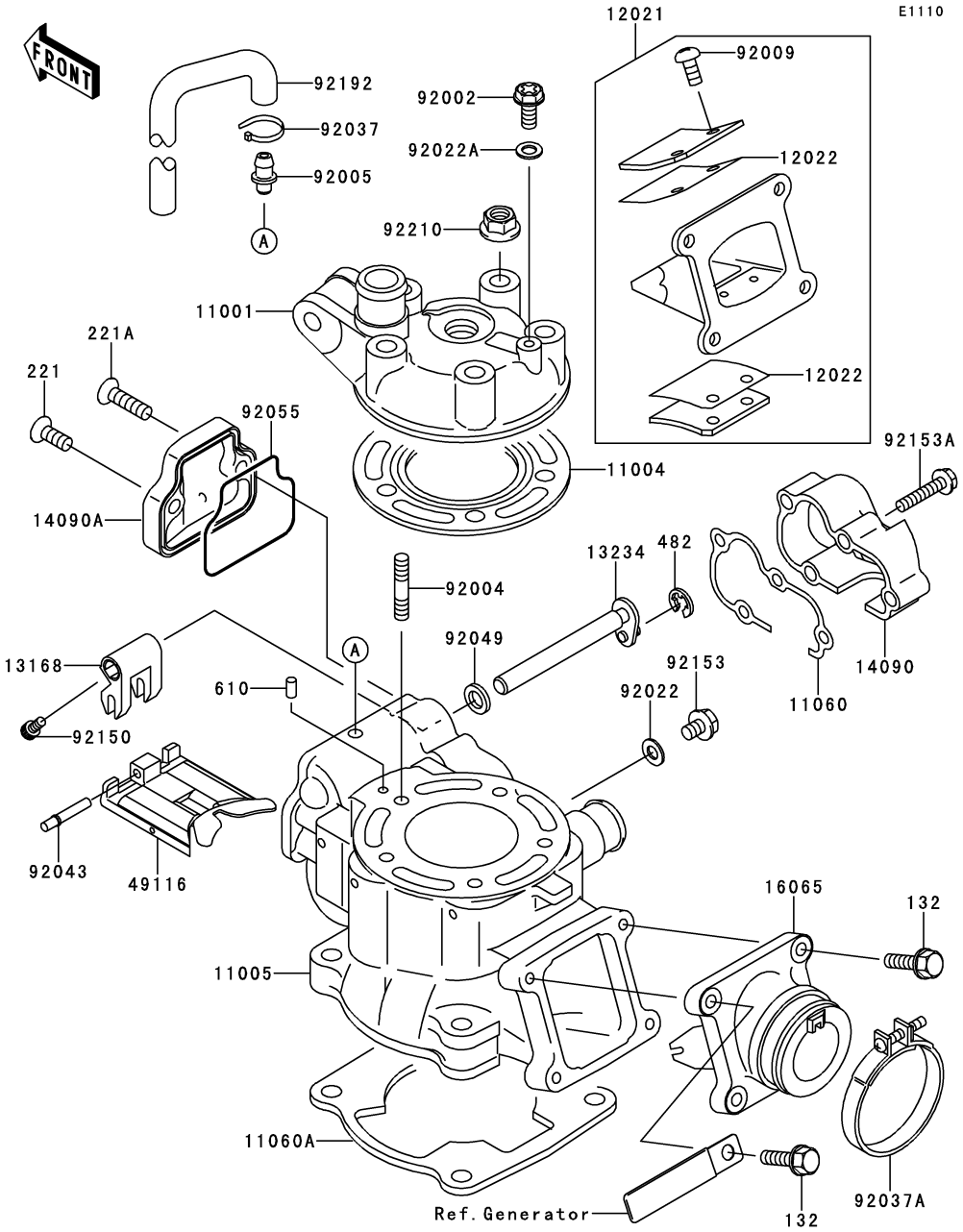

Ref. No.	Part No.	Description	Spec Code	Quantity-KX85 '12 ACF	'12 BCF			
11001	11001-1539	HEAD-CYLINDER		1	1			
11004	11004-1360	GASKET-HEAD		1	1			
11005	11005-0052	CYLINDER-ENGINE		1	1			
11060	11060-1778	GASKET,GOVERNOR COVER		1	1			
11060A	11060-1779	GASKET,CYLINDER BASE		1	1			
12021	12021-1123	VALVE-ASSY-REED		1	1			
12022	12022-1084	VALVE-REED		2	2			
13168	13168-1499	LEVER,MAIN VALVE		1	1			
13234	13234-1105	SHAFT-COMP		1	1			
14090	14090-1811	COVER		1	1			
14090A	14090-1812	COVER		1	1			
16065	16065-1372	HOLDER-CARBURETOR		1	1			
49116	49116-1181	VALVE-ASSY		1	1			
92002	92002-1222	BOLT,6X10		1	1			
92004	92004-1253	STUD,8X33		5	5			
92005	92005-0050	FITTING		1	1			
92009	92009-1014	SCREW,REED VALVE		4	4			
92022	92022-077	WASHER,6.1X12X1		1	1			
92022A	92022-304	WASHER,6.2X11X1		1	1			
92037	92037-1173	CLAMP		1	1			
92037A	92037-1843	CLAMP		1	1			
92043	92043-1470	PIN,MAIN VALVE		1	1			
92049	92049-1238	SEAL-OIL,SD088144		1	1			
92055	92055-1566	RING-O		1	1			
92150	92150-1888	BOLT,SOCKET,4X8		1	1			
92153	92153-1005	BOLT,FLANGED,6X8		1	1			
92153A	92153-1006	BOLT,FLANGED,5X25		4	4			
92192	92192-0265	TUBE,L=426.3		1	1			
92210	92210-0076	NUT,8MM		5	5			
132	132BC0620	BOLT-FLANGED-SMALL,6X20		4	4			
221	221AA0616	SCREW-CSK-CROSS,6X16		1	1			
221A	221AA0620	SCREW-CSK-CROSS,6X20		1	1			
482	482J5000	CIRCLIP-TYPE-E		1	1			
610	610A0408	ROLLER,4X8		1	1			

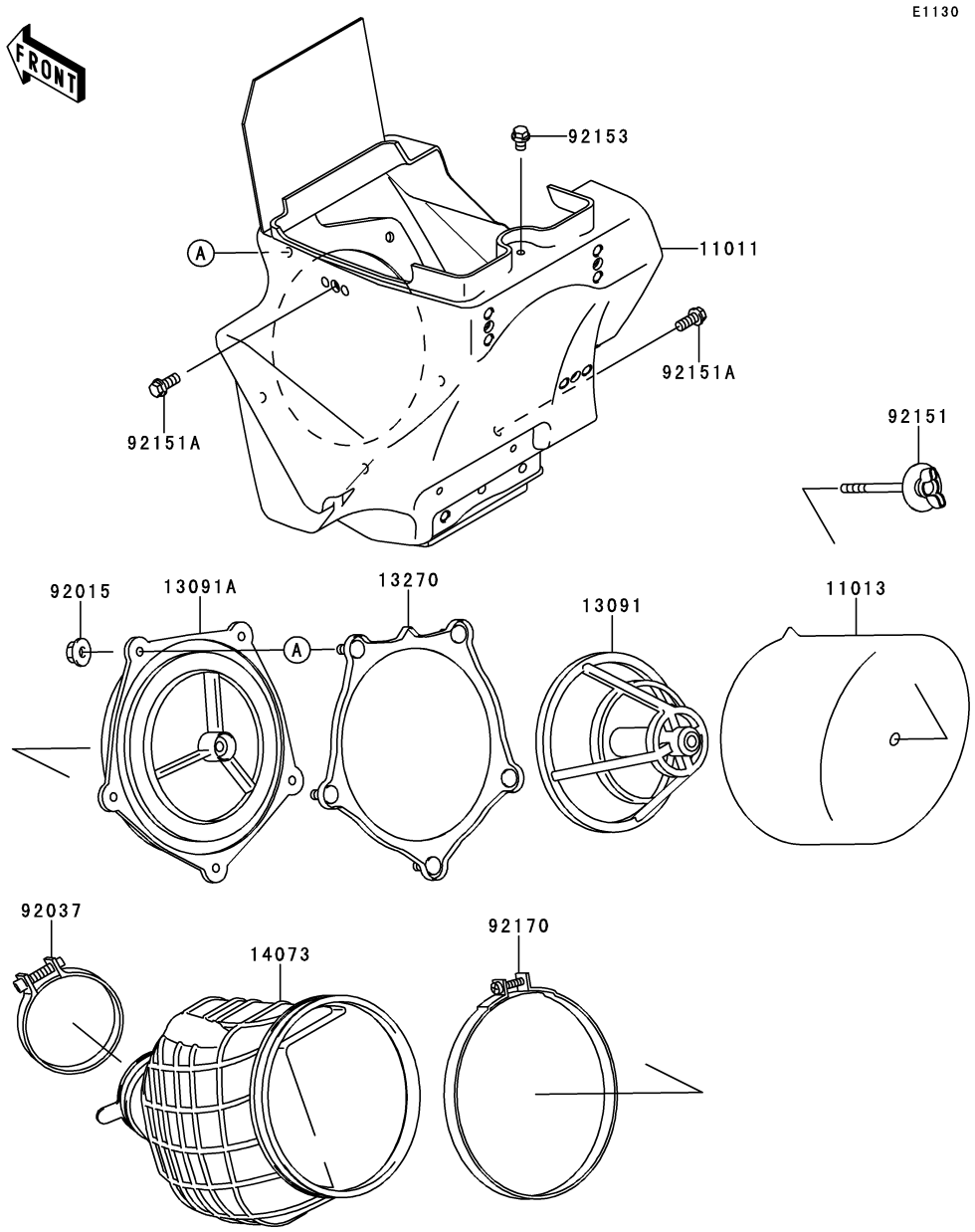

Ref. No.	Part No.	Description	Spec Code	Quantity-KX85 '12 ACF	'12 BCF			
11011	11011-1612	CASE-AIR FILTER		1	1			
11013	11013-1271	ELEMENT-AIR FILTER		1	1			
13091	13091-1696	HOLDER,ELEMENT		1	1			
13091A	13091-1697	HOLDER		1	1			
13270	13270-1905	PLATE,AIR FILTER		1	1			
14073	14073-1785	DUCT		1	1			
92015	92015-1259	NUT,FLANGED,5MM		5	5			
92037	92037-1486	CLAMP,55MM		1	1			
92151	92151-1256	BOLT,AIR FILTER		1	1			
92151A	92151-1423	BOLT,6X14		2	2			
92153	92153-0860	BOLT,6X8		1	1			
92170	92170-1194	CLAMP,126MM		1	1			

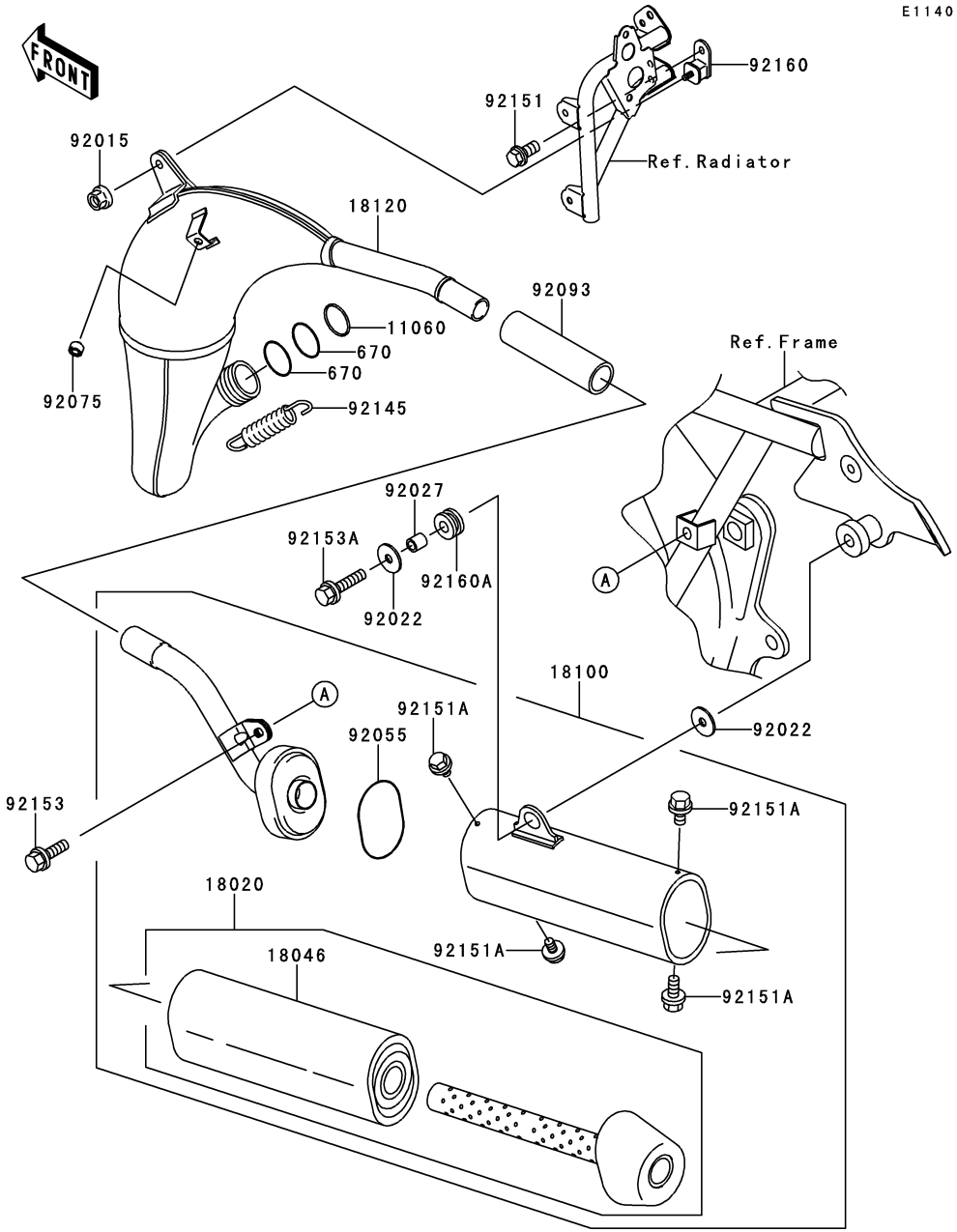

Ref. No.	Part No.	Description	Spec Code	Quantity-KX85 '12 ACF	Quantity-KX85 '12 BCF			
11060	11060-1842	GASKET,EXHAUST HOLDER		1	1			
18020	18020-1272	BAFFLE		1	1			
18046	18046-1559	WOOL		1	1			
18100	18100-0016	BODY-ASSY-MUFFLER		1	1			
18120	18120-1114	CHAMBER-EXHAUST		1	1			
92015	92015-1078	NUT,FLANGED,6MM		1	1			
92022	92022-237	WASHER,6.5X22X1.6		2	2			
92027	92027-120	COLLAR,6.8X10X10.5		1	1			
92055	92055-1461	RING-O,BAFFLE PIPE		1	1			
92075	92075-1598	DAMPER		1	1			
92093	92093-1200	SEAL,MUFFLER JOINT		1	1			
92145	92145-1340	SPRING,EXHAUST CONNECTING		2	2			
92151	92151-1133	BOLT,6X12		1	1			
92151A	92151-1822	BOLT,FLANGED,6X10		4	4			
92153	92153-1007	BOLT,FLANGED WP,6X14		1	1			
92153A	92153-1008	BOLT,FLANGED WP,6X25		1	1			
92160	92160-1176	DAMPER,MUFFLER,FR		1	1			
92160A	92160-1913	DAMPER		1	1			
670	670E3034	O RING		2	2			

E1320

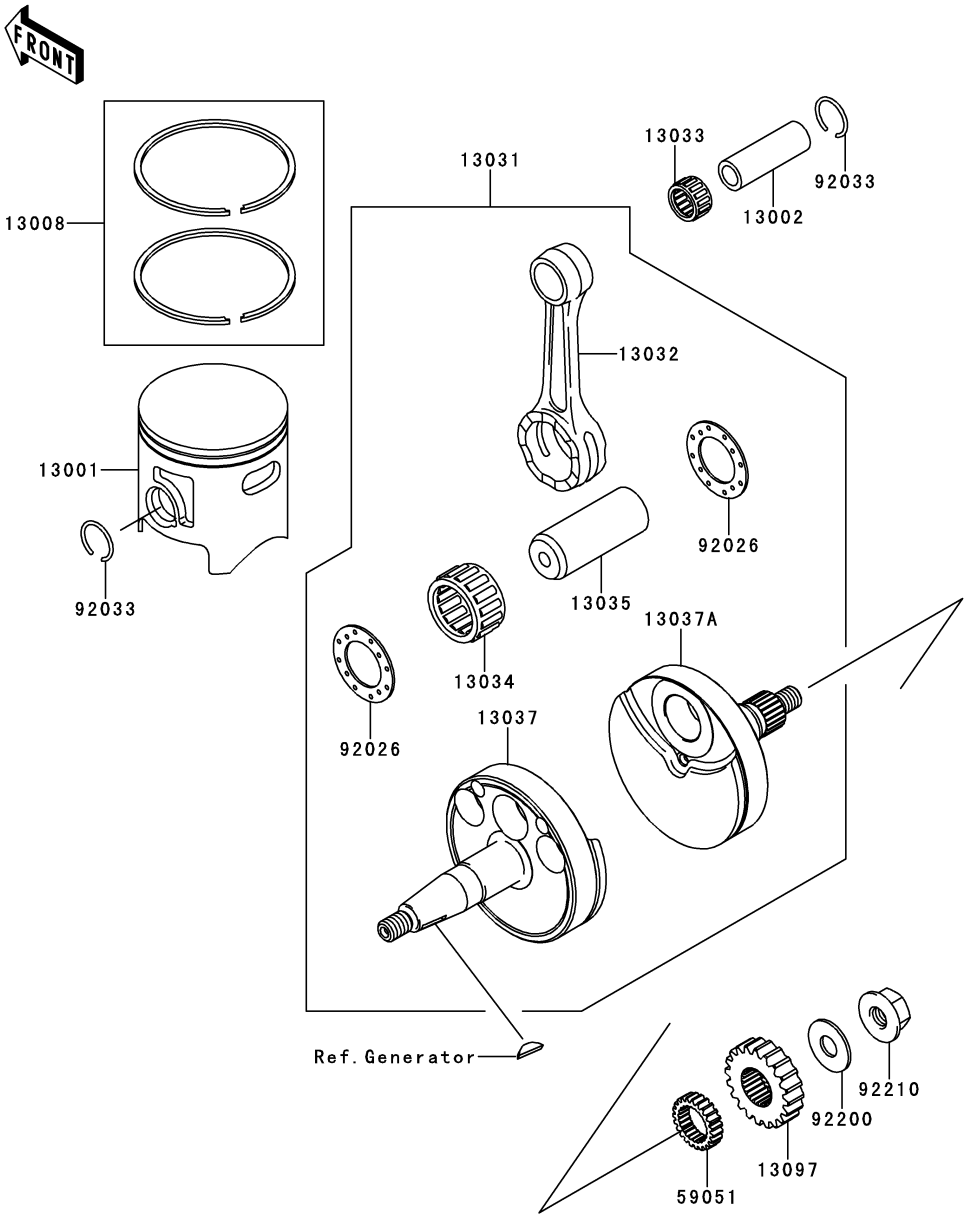

Ref. No.	Part No.	Description	Spec Code	Quantity-KX85 '12 ACF	'12 BCF			
13001	13001-0006	PISTON-ENGINE,B		1	1			
13002	13002-1079	PIN-PISTON		1	1			
13008	13008-1200	RING-SET-PISTON		1	1			
13031	13031-0040	CRANKSHAFT-COMP		1	1			
13032	13032-1230	ROD-CONNECTING		1	1			
13033	13033-1060	BEARING-SMALL END		1	1			
13034	13034-0013	BEARING-BIG END,SKTZ 222916EGS		1	1			
13035	13035-1054	PIN-CRANK		1	1			
13037	13037-0050	CRANKSHAFT,LH		1	1			
13037A	13037-0051	CRANKSHAFT,RH		1	1			
13097	13097-1148	GEAR-PRIMARY SPUR,20T		1	1			
59051	59051-1146	GEAR-SPUR,PUMP,23T		1	1			
92026	92026-1136	SPACER,22.2X37X1.0		2	2			
92033	92033-0005	RING-SNAP		2	2			
92200	92200-0213	WASHER,10.2X25X1.5		1	1			
92210	92210-0215	NUT,FLANGED,M10XL1.25		1	1			

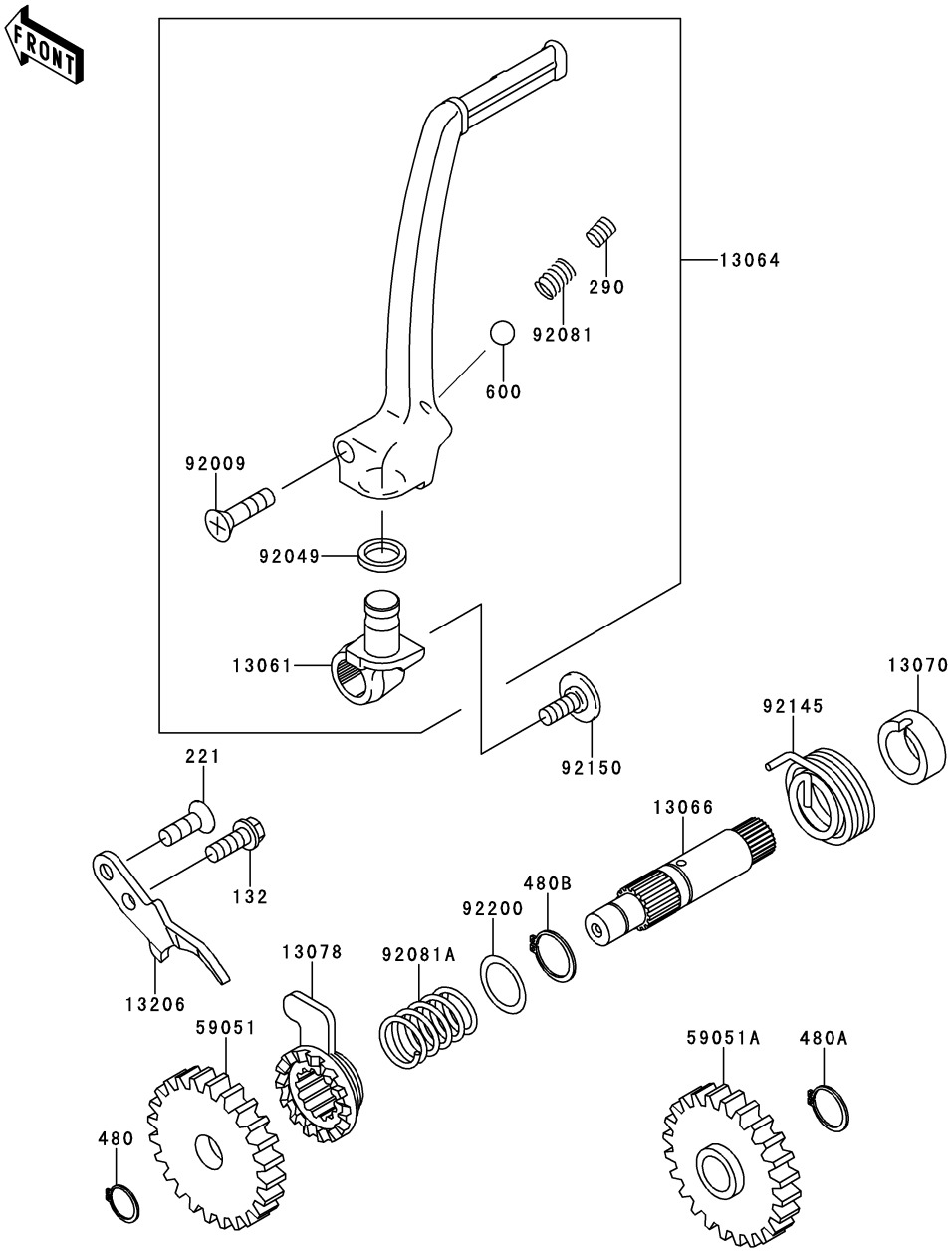

Ref. No.	Part No.	Description	Spec Code	Quantity-KX85 '12 ACF	'12 BCF			
13061	13061-1712	BOSS,KICK PEDAL		1	1			
13064	13064-1188	LEVER-ASSY-KICK,PEDAL		1	1			
13066	13066-1097	SHAFT-KICK		1	1			
13070	13070-1314	GUIDE		1	1			
13078	13078-1004	RATCHET		1	1			
13206	13206-1066	GUIDE-KICK		1	1			
59051	59051-1026	GEAR-SPUR,32T		1	1			
59051A	59051-1147	GEAR-SPUR,31T,KICK		1	1			
92009	92009-1607	SCREW,6X27		1	1			
92049	92049-1468	SEAL-OIL,SR12162.5		1	1			
92081	92081-020	SPRING,KICK PEDAL		1	1			
92081A	92081-122	SPRING,RATCHET		1	1			
92145	92145-1058	SPRING		1	1			
92150	92150-1673	BOLT,SOCKET,6X16		1	1			
92200	92200-1209	WASHER,KICKSHAFT		1	1			
132	132BA0616	BOLT-FLANGED-SMALL,6X16		1	1			
221	221AA0618	SCREW-CSK-CROSS,6X18		1	1			
290	290CA0808	SCREW-SET-SOCKET,8X8		1	1			
480	480J1200	CIRCLIP-TYPE-C,12MM		1	1			
480A	480J1500	CIRCLIP-TYPE-C,15MM		1	1			
480B	480J1600	CIRCLIP-TYPE-C,16MM		1	1			
600	600A0800	BALL-STEEL,1/4"		1	1			

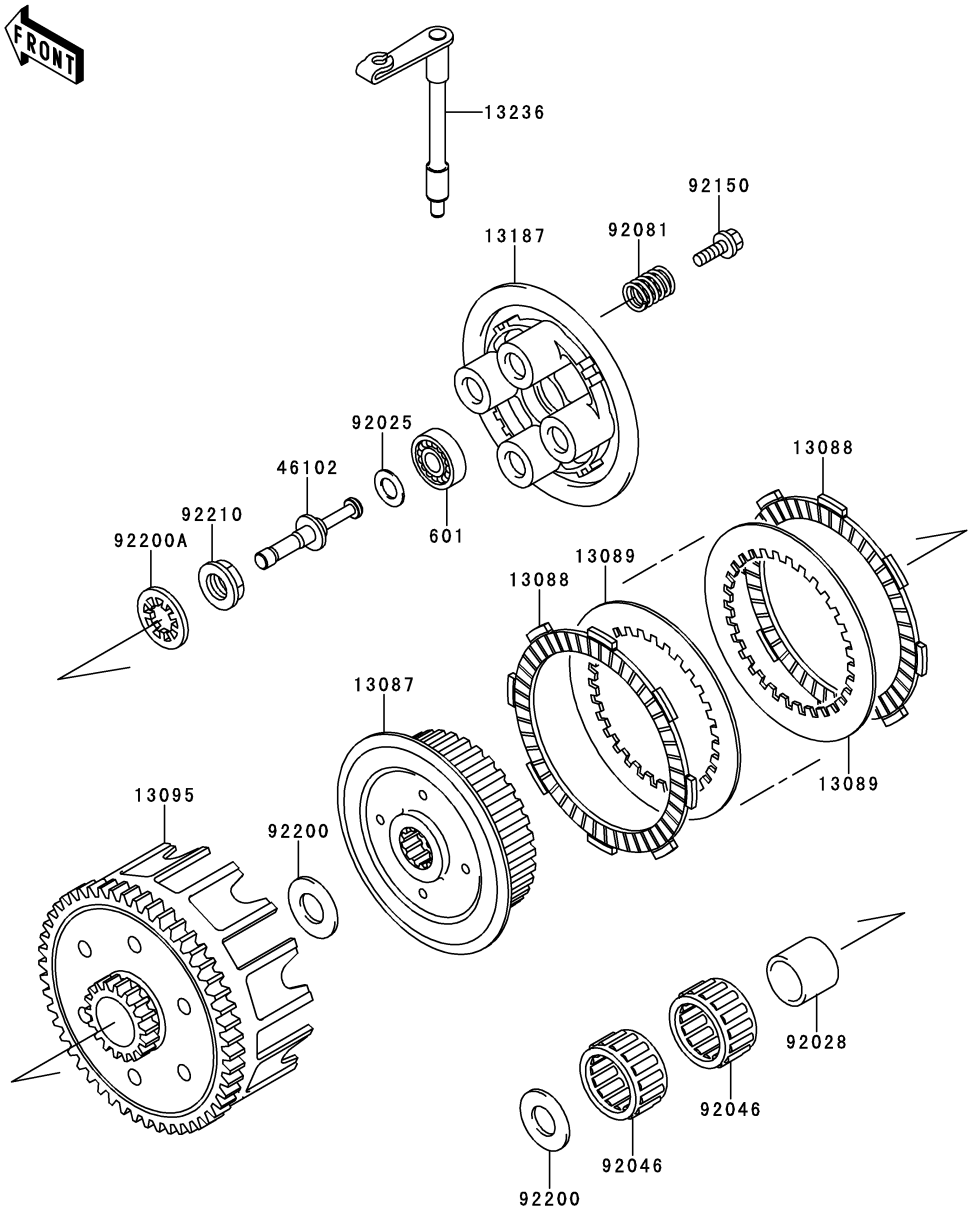

E1350

Ref. No.	Part No.	Description	Spec Code	Quantity-KX85 ’12 ACF	’12 BCF			
13087	13087-1170	HUB-CLUTCH		1	1			
13088	13088-1016	PLATE-FRICTION,ID=91		6	6			
13089	13089-1120	PLATE-CLUTCH		5	5			
13095	13095-1406	HOUSING-COMP-CLUTCH		1	1			
13187	13187-1013	PLATE-CLUTCH OPERATING		1	1			
13236	13236-1298	LEVER-COMP,RELEASE		1	1			
46102	46102-1409	ROD,CLUTCH RELEASE		1	1			
92025	92025-1780	SHIM		1	1			
92028	92028-1811	BUSHING,20X25X21.1		1	1			
92046	92046-1254	BEARING-NEEDLE,KT252910EG		2	2			
92081	92081-1492	SPRING,CLUTCH		4	4			
92150	92150-1715	BOLT,6X20,WASHER		4	4			
92200	92200-1351	WASHER,20.3X33X2.0		2	2			
92200A	92200-1352	WASHER,20X30X2.6		1	1			
92210	92210-1113	NUT,16MM		1	1			
601	601A6001	BEARING-BALL		1	1			

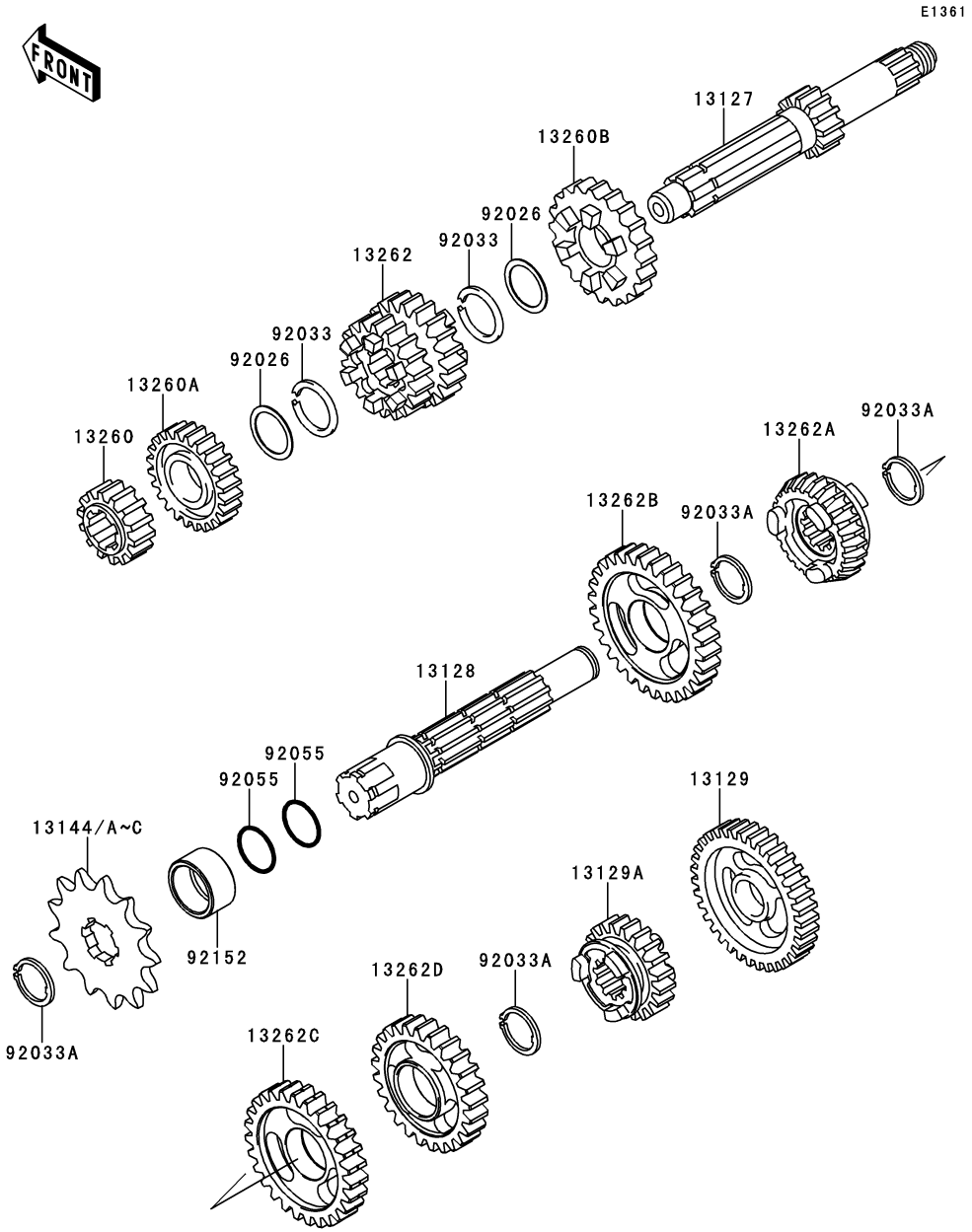

Ref. No.	Part No.	Description	Spec Code	Quantity-KX85 '12 ACF	'12 BCF			
13127	13127-1261	SHAFT-TRANSMISSION INPUT,13T		1	1			
13128	13128-0022	SHAFT-TRANSMISSION OUTPUT		1	1			
13129	13129-1725	GEAR,OUTPUT LOW,33T		1	1			
13129A	13129-1730	GEAR,OUTPUT 6TH,22T		1	1			
13144	13144-1022	SPROCKET-OUTPUT,14T		1				
13144A	13144-1022 (OPTION)	SPROCKET-OUTPUT,14T			1			
13144B	13144-1023	SPROCKET-OUTPUT,13T			1			
13144C	13144-1023 (OPTION)	SPROCKET-OUTPUT,13T		1				
13260	13260-1014	GEAR,INPUT 2ND,16T		1	1			
13260A	13260-1950	GEAR-TRANSMISSION SPUR,5TH,22T		1	1			
13260B	13260-1951	GEAR-TRANSMISSION SPUR,6TH,23T		1	1			
13262	13262-0180	GEAR,INPUT 3RD&4TH,18&20T		1	1			
13262A	13262-0181	GEAR,OUTPUT 5TH,24T		1	1			
13262B	13262-0298	GEAR,OUTPUT 2ND,30T		1	1			
13262C	13262-0299	GEAR,OUTPUT 3RD,27T		1	1			
13262D	13262-0300	GEAR,OUTPUT 4TH,25T		1	1			
92026	92026-1602	SPACER,18X23X0.50		2	2			
92033	92033-028	RING-SNAP		2	2			
92033A	92033-1079	RING-SNAP,18MM		4	4			
92055	92055-022	RING-O,17.5X1.5		2	2			
92152	92152-0195	COLLAR,20X25X12.9		1	1			

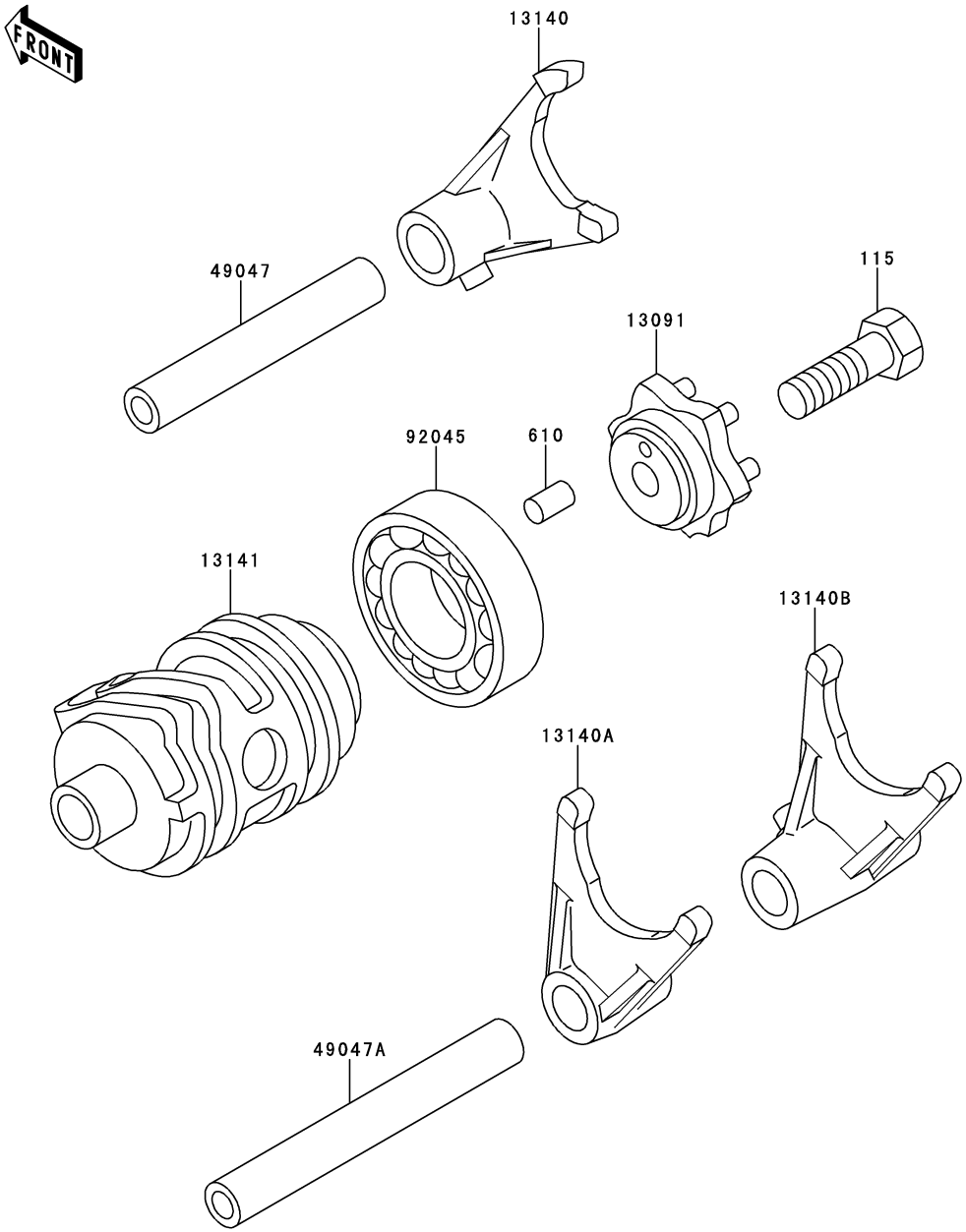

Ref. No.	Part No.	Description	Spec Code	Quantity-KX85				
				’12	’12			
				ACF	BCF			
13091	13091-1390	HOLDER,CHANGE DRUM		1	1			
13140	13140-1302	FORK-SHIFT,5TH&6TH		1	1			
13140A	13140-1303	FORK-SHIFT,2ND&3RD		1	1			
13140B	13140-1304	FORK-SHIFT,LOW&4TH		1	1			
13141	13141-1120	DRUM-CHANGE		1	1			
49047	49047-1063	ROD-SHIFT,5.9X10X64.5		1	1			
49047A	49047-1064	ROD-SHIFT,5.9X10X81		1	1			
92045	92045-1058	BEARING-BALL,6905Z		1	1			
115	115BA0825	BOLT-SMALL-UPSET,8X25		1	1			
610	610A0408	ROLLER,4X8		1	1			

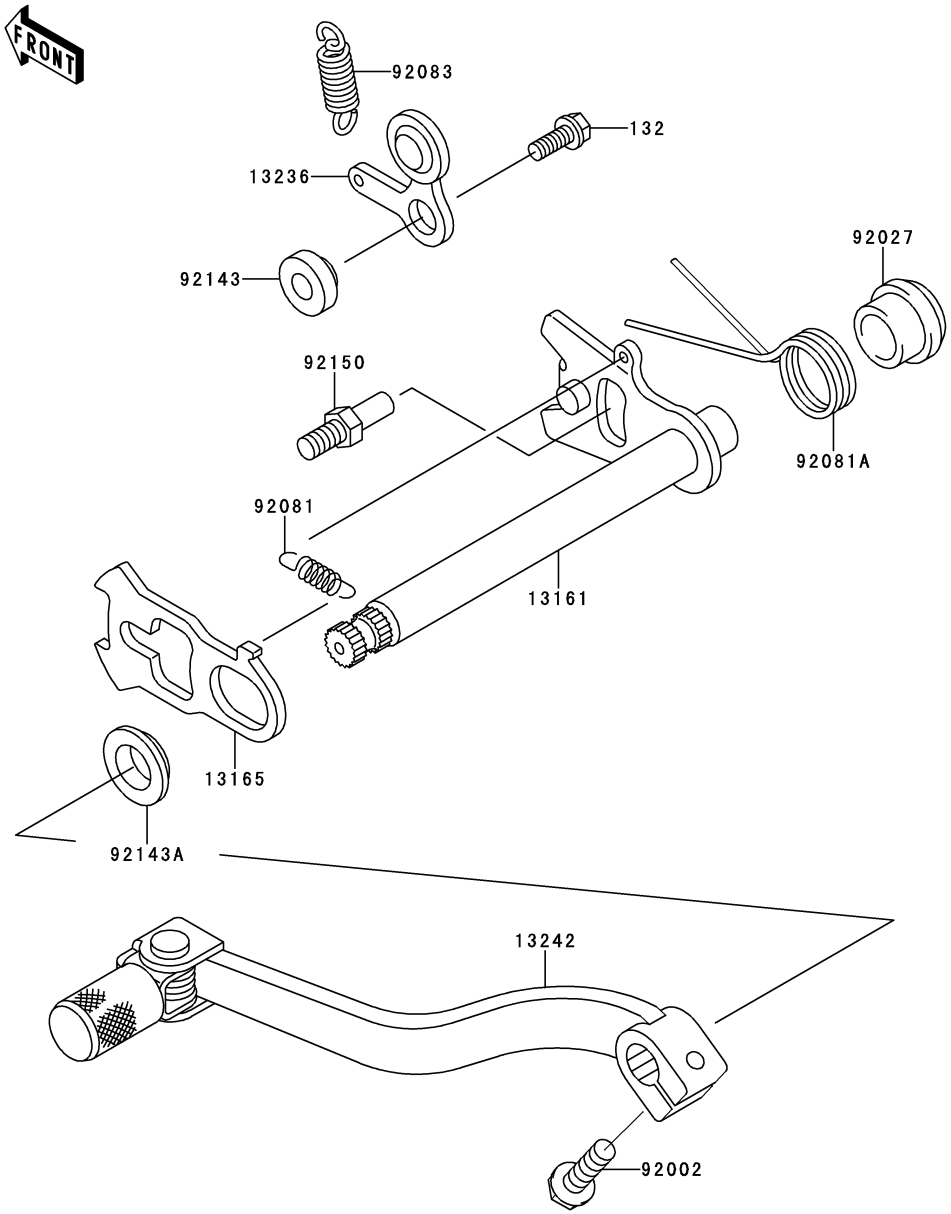

Ref. No.	Part No.	Description	Spec Code	Quantity-KX85 '12 ACF	'12 BCF			
13161	13161-1126	LEVER-COMP-CHANGE SHAFT		1	1			
13165	13165-1114	PAWL,CHANGE LEVER		1	1			
13236	13236-1152	LEVER-COMP,POSITION		1	1			
13242	13242-1286	LEVER-ASSY-CHANGE,PEDAL		1	1			
92002	92002-1237	BOLT,6X20		1	1			
92027	92027-1940	COLLAR		1	1			
92081	92081-076	SPRING,CHANGE LEVER		1	1			
92081A	92081-1716	SPRING,CHANGE SHAFT RETURN		1	1			
92083	92083-012	SPRING,CHANGE DRUM LEVER		1	1			
92143	92143-1055	COLLAR		1	1			
92143A	92143-1995	COLLAR		1	1			
92150	92150-1467	BOLT,RETURN SPRING		1	1			
132	132BA0616	BOLT-FLANGED-SMALL,6X16		1	1			

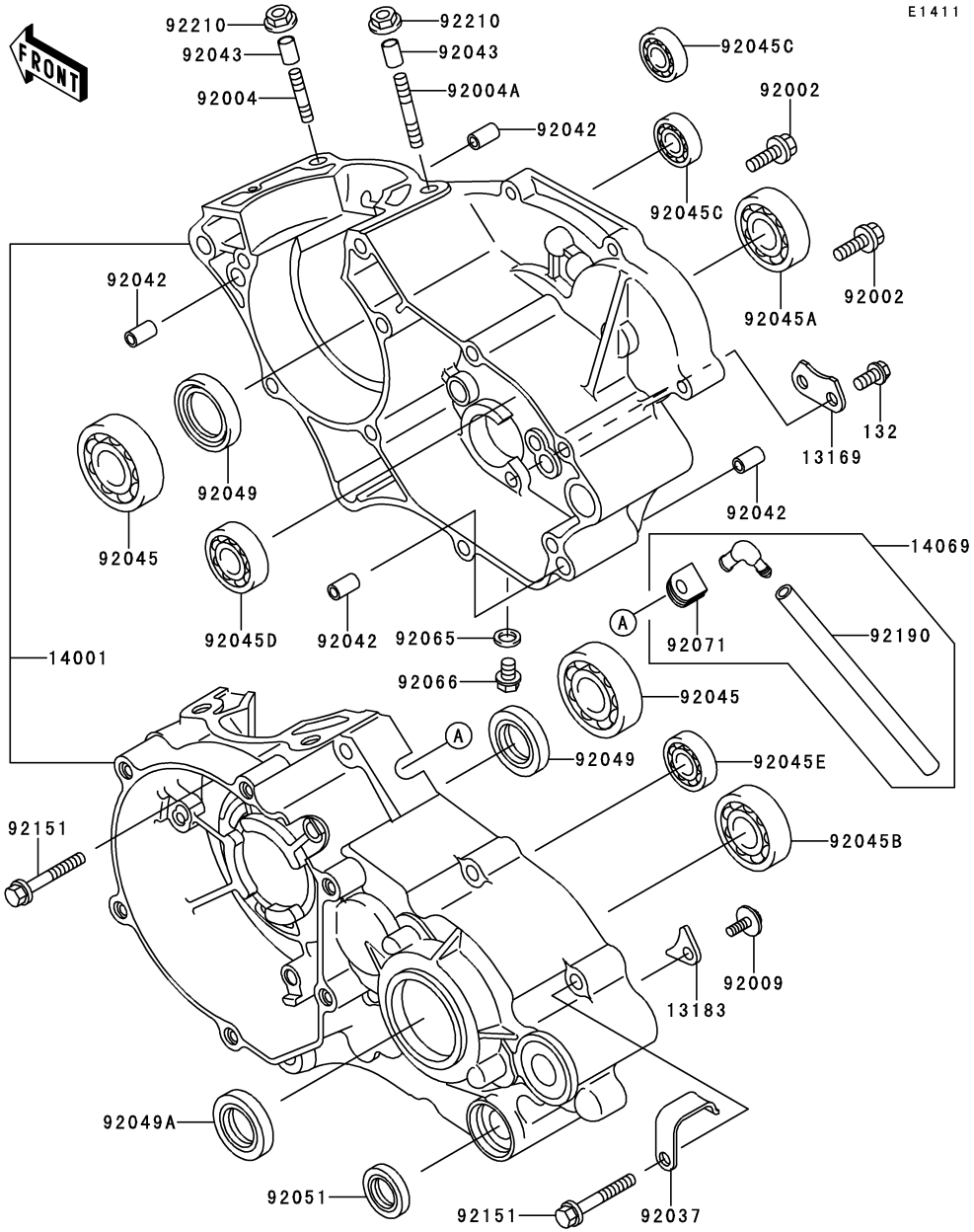

Ref. No.	Part No.	Description	Spec Code	Quantity-KX85 '12 ACF	'12 BCF			
13169	13169-012	PLATE,CHANGE DRUM		1	1			
13183	13183-1182	PLATE		2	2			
14001	14001-0118	SET-CRANKCASE		1	1			
14069	14069-1062	BREATHER		1	1			
92002	92002-1659	BOLT,6X16		2	2			
92004	92004-1252	STUD,8X28.5		2	2			
92004A	92004-1254	STUD,8X37		2	2			
92009	92009-1563	SCREW,6X10		2	2			
92037	92037-1318	CLAMP,HARNESS		1	1			
92042	92042-007	PIN,DOWEL,6.3X8X14		4	4			
92043	92043-1264	PIN,8.2X10X14		2	2			
92045	92045-1059	BEARING-BALL,R-6304C3		2	2			
92045A	92045-1118	BEARING-BALL,6004TMB		1	1			
92045B	92045-1226	BEARING-BALL,6204		1	1			
92045C	92045-1304	BEARING-BALL,626MC3		2	2			
92045D	92045-1360	BEARING-BALL,TMB002		1	1			
92045E	92045-1450	BEARING-BALL,16101JRXC3		1	1			
92049	92049-1188	SEAL-OIL,SD20407GS		2	2			
92049A	92049-1292	SEAL-OIL,TC25375		1	1			
92051	92051-005	SEAL-OIL,TB13225.5		1	1			
92065	92065-058	GASKET,10.5X16X1		1	1			
92066	92066-1437	PLUG,DRAIN		1	1			
92071	92071-042	GROMMET,BREATHER		1	1			
92151	92151-1135	BOLT,6X35		9	9			
92190	92190-1116	TUBE,6X9X330		1	1			
92210	92210-0076	NUT,8MM		4	4			
132	132BA0612	BOLT-FLANGED-SMALL,6X12		2	2			

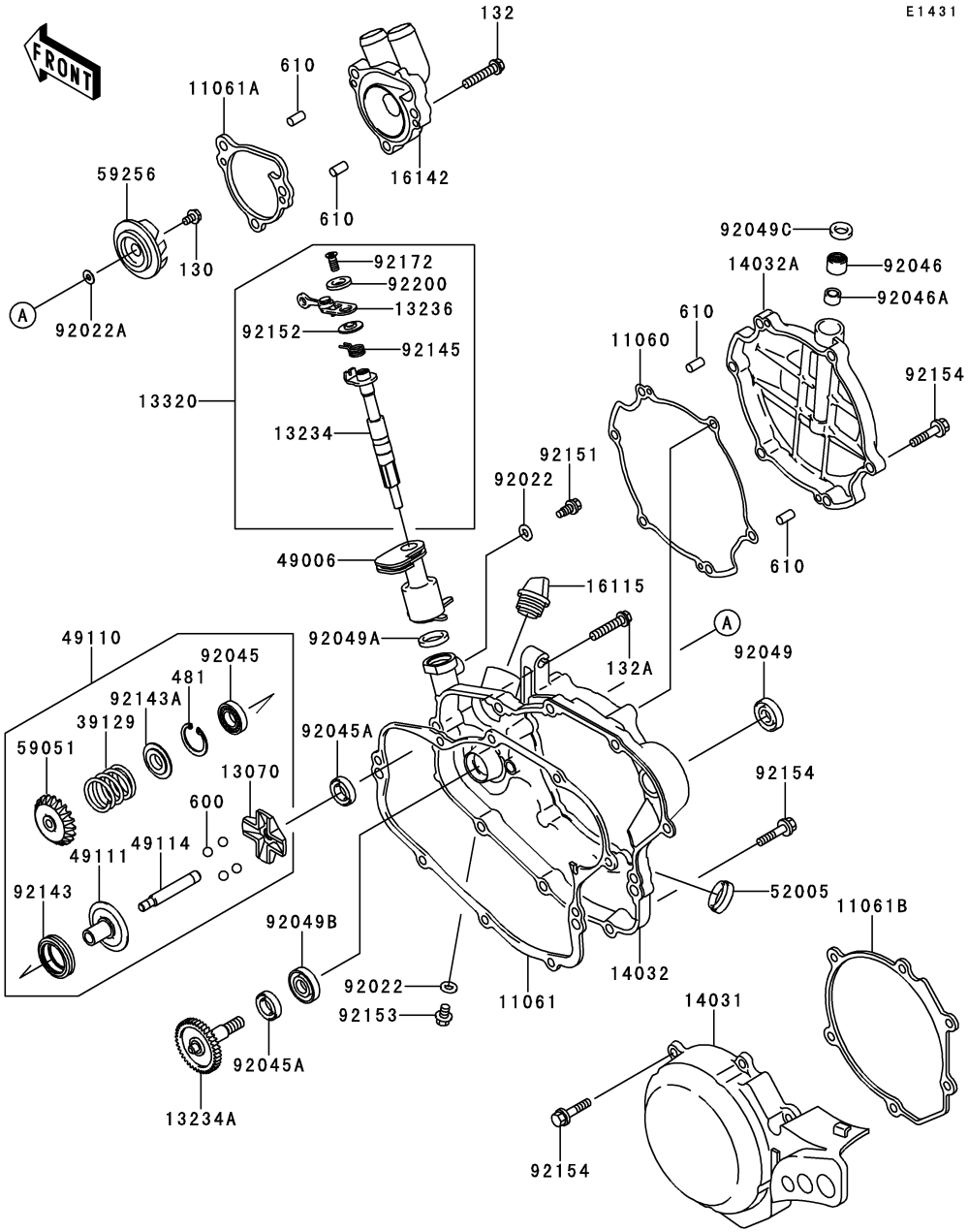

Ref. No.	Part No.	Description	Spec Code	Quantity-KX85 '12 ACF	'12 BCF			
11060	11060-1795	GASKET,CLUTCH COVER		1	1			
11061	11061-0122	GASKET,CLUTCH COVER		1	1			
11061A	11061-0184	GASKET,PUMP COVER		1	1			
11061B	11061-0194	GASKET,GENERATOR COVER		1	1			
13070	13070-1309	GUIDE,GOVERNOR		1	1			
13234	13234-0008	SHAFT-COMP		1	1			
13234A	13234-1103	SHAFT-COMP,WATER PUMP		1	1			
13236	13236-0023	LEVER-COMP		1	1			
13320	13320-0002	LEVER-ASSY		1	1			
14031	14031-0108	COVER-GENERATOR		1	1			
14032	14032-0041	COVER-CLUTCH,INSIDE		1	1			
14032A	14032-0134	COVER-CLUTCH,OUTSIDE		1	1			
16115	16115-018	CAP-OIL FILLER		1	1			
16142	16142-1144	COVER-PUMP,WATER		1	1			
39129	39129-1022	SPRING-GOVERNOR		1	1			
49006	49006-1313	BOOT,GOVERNOR		1	1			
49110	49110-0010	GOVERNOR-ASSY		1	1			
49111	49111-1064	HOLDER-GOVERNOR WEIGHT		1	1			
49114	49114-0005	SHAFT-GOVERNOR		1	1			
52005	52005-0019	GAUGE,OIL LEVEL		1	1			
59051	59051-1412	GEAR-SPUR		1	1			
59256	59256-1064	IMPELLER		1	1			
92022	92022-077	WASHER,6.1X12X1		2	2			
92022A	92022-1380	WASHER,5.2X13X1		1	1			
92045	92045-0010	BEARING-BALL		1	1			
92045A	92045-1305	BEARING-BALL,608MC3		2	2			
92046	92046-1160	BEARING-NEEDLE,HK1010		1	1			
92046A	92046-1217	BEARING-NEEDLE,6BTM109		1	1			
92049	92049-002	SEAL-OIL,SB16244		1	1			
92049A	92049-1262	SEAL-OIL,AG0353-F0		1	1			
92049B	92049-1366	SEAL-OIL,MHSD8X18X10J-1		1	1			
92049C	92049-1414	SEAL-OIL,BG1408F0		1	1			
92143	92143-1932	COLLAR		1	1			
92143A	92143-1933	COLLAR		1	1			
92145	92145-0089	SPRING		1	1			
92151	92151-1180	BOLT,FLANGED,6X11		1	1			
92152	92152-0085	COLLAR,LEVER		1	1			
92153	92153-1005	BOLT,FLANGED,6X8		1	1			
92154	92154-0520	BOLT,FLANGED,6X25		20	20			
92172	92172-0087	SCREW,6X14		1	1			

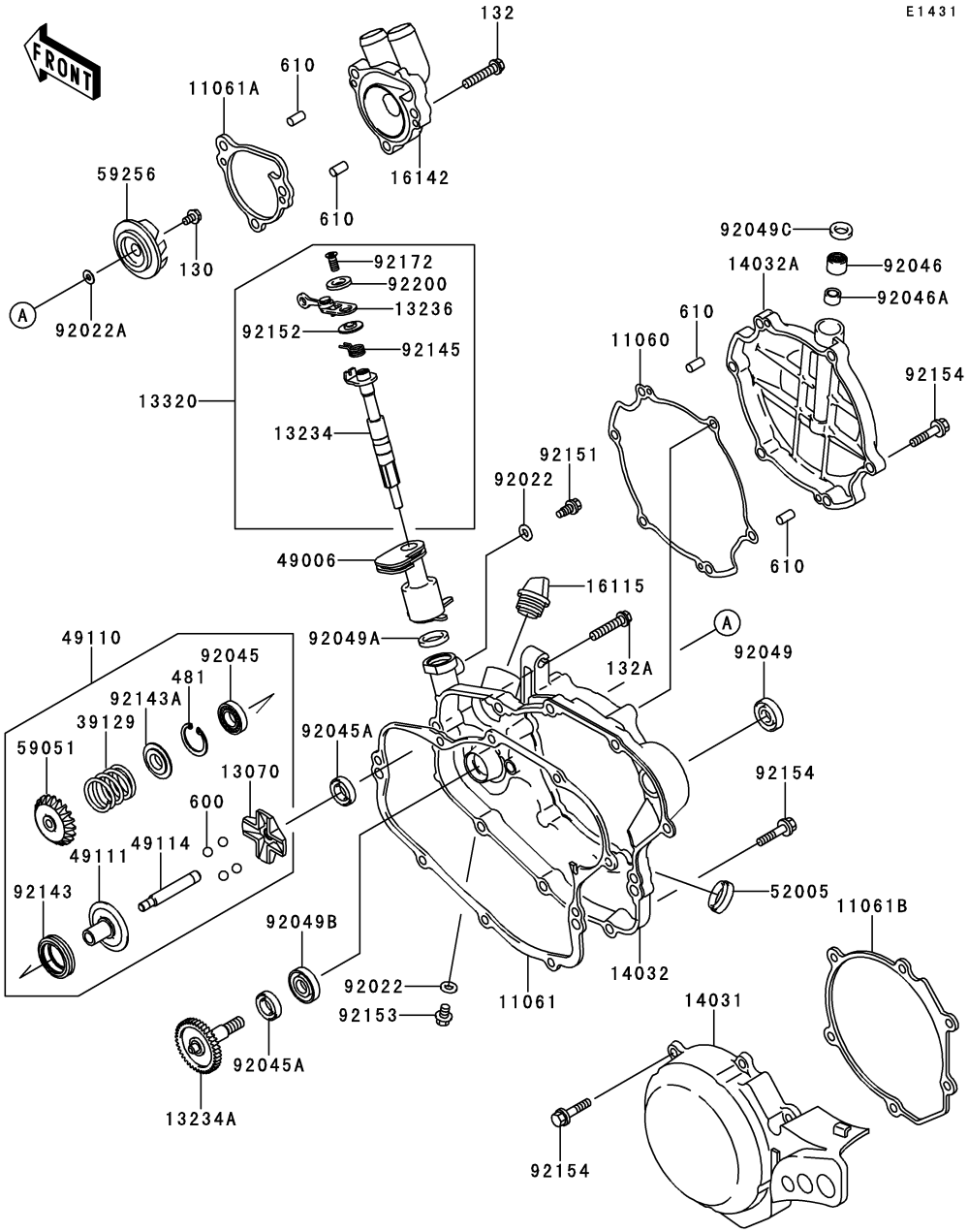

Ref. No.	Part No.	Description	Spec Code	Quantity-KX85				
				’12	’12			
				ACF	BCF			
92200	92200-0040	WASHER,LEVER		1	1			
130	130CA0510	BOLT-FLANGED,5X10		1	1			
132	132BC0620	BOLT-FLANGED-SMALL,6X20		3	3			
132A	132BC0630	BOLT-FLANGED-SMALL,6X30		1	1			
481	481J2400	CIRCLIP		1	1			
600	600A1000	BALL-STEEL,5/16"		4	4			
610	610A0408	ROLLER,4X8		4	4			

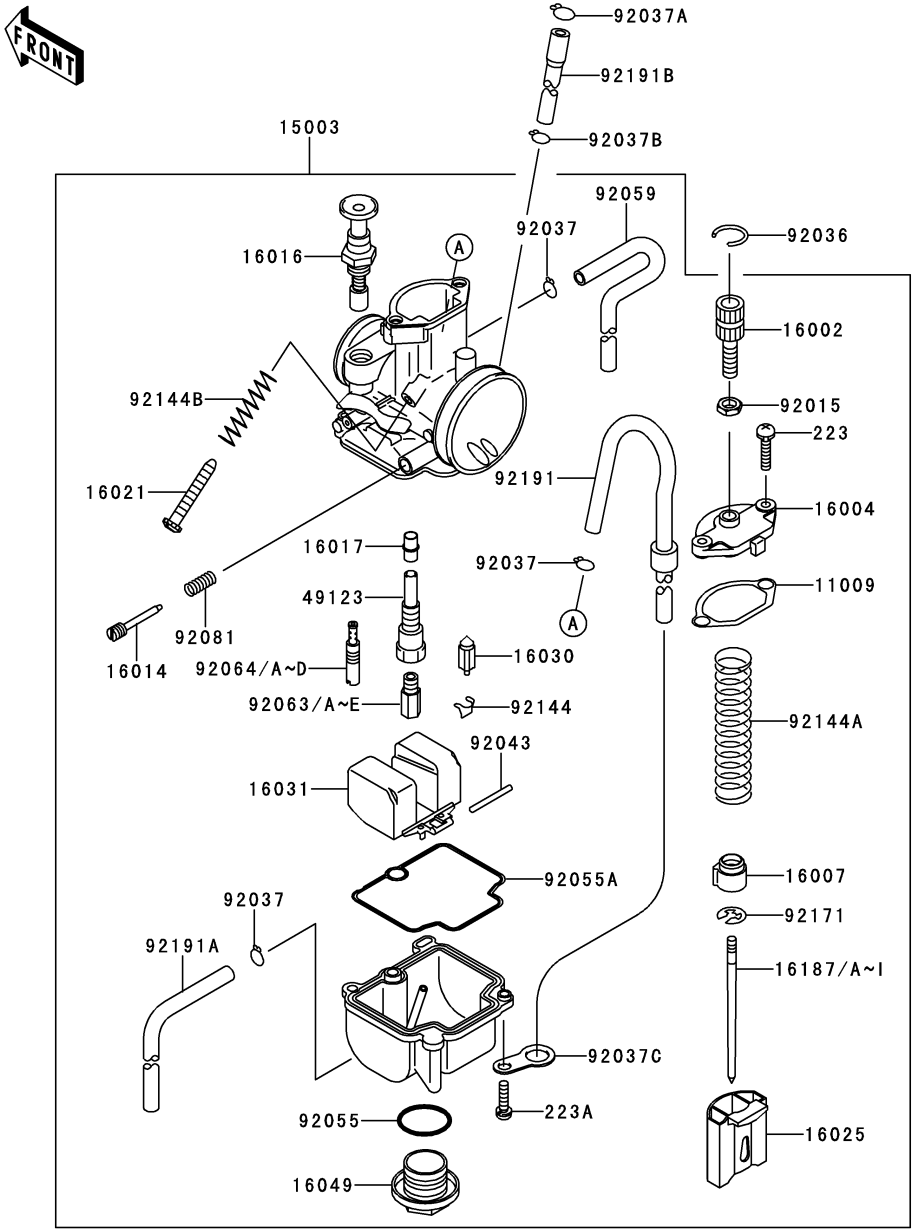

Ref. No.	Part No.	Description	Spec Code	Quantity-KX85 '12 ACF	Quantity-KX85 '12 BCF			
11009	11009-1759	GASKET,MIXING CHAMBER		1	1			
15003	15003-1617	CARBURETOR-ASSY		1	1			
16002	16002-1056	ADJUSTER-CABLE		1	1			
16004	16004-1065	CAP-CHAMBER,MIXING		1	1			
16007	16007-1155	SEAT-SPRING,THROTTLE VALVE		1	1			
16014	16014-1058	SCREW-PILOT AIR		1	1			
16016	16016-1075	PLUNGER,STARTER		1	1			
16017	16017-1431	JET-NEEDLE		1	1			
16021	16021-1161	SCREW-THROTTLE STOP		1	1			
16025	16025-1220	VALVE-THROTTLE,CA3.5		1	1			
16030	16030-1064	VALVE-FLOAT		1	1			
16031	16031-1065	FLOAT		1	1			
16049	16049-1051	COVER-MAIN JET		1	1			
16187	16187-1176 (OPTION)	NEEDLE-JET,NAPC		1	1			
16187A	16187-1177 (OPTION)	NEEDLE-JET,NAPD		1	1			
16187B	16187-1178	NEEDLE-JET,NAPE		1	1			
16187C	16187-1179 (OPTION)	NEEDLE-JET,NAPF		1	1			
16187D	16187-1180 (OPTION)	NEEDLE-JET,NAPG		1	1			
16187E	16187-1182 (OPTION)	NEEDLE-JET,NAQC		1	1			
16187F	16187-1183 (OPTION)	NEEDLE-JET,NAQD		1	1			
16187G	16187-1184 (OPTION)	NEEDLE-JET,NAQE		1	1			
16187H	16187-1185 (OPTION)	NEEDLE-JET,NAQF		1	1			
16187I	16187-1186 (OPTION)	NEEDLE-JET,NAQG		1	1			
49123	49123-1054	HOLDER-MAIN JET		1	1			
92015	92015-1574	NUT,CABLE ADJUST LOCK		1	1			
92036	92036-018	RING-SNAP		1	1			
92037	92037-1396	CLAMP,TUBE		3	3			
92037A	92037-147	CLAMP,TUBE		1	1			
92037B	92037-1712	CLAMP		1	1			
92037C	92037-1969	CLAMP,HOSE		1	1			
92043	92043-1207	PIN,FLOAT		1	1			
92055	92055-1167	RING-O,MAIN JET COVER		1	1			

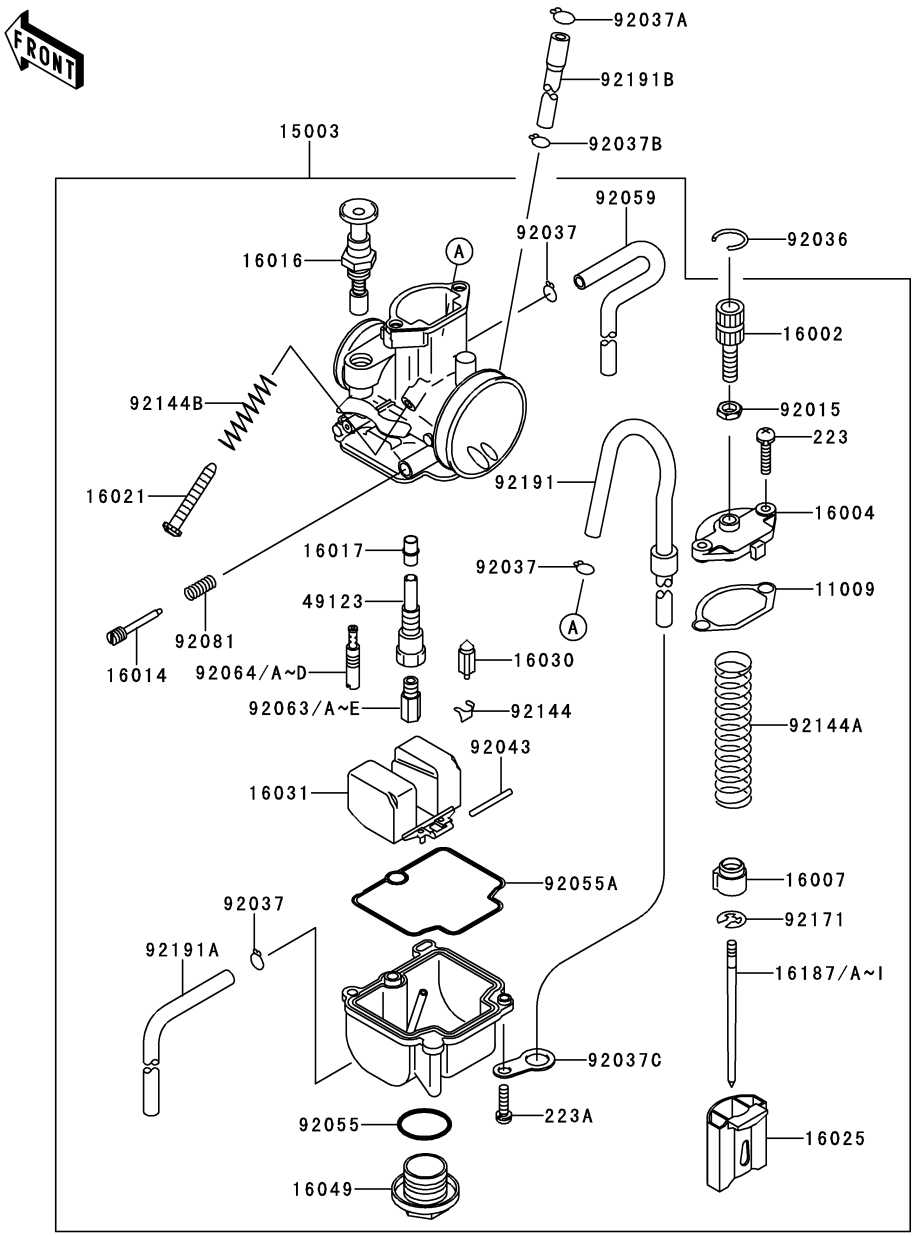

Ref. No.	Part No.	Description	Spec Code	Quantity-KX85 '12 ACF	'12 BCF			
92055A	92055-1389	RING-O,FLOAT CHAMBER		1	1			
92059	92059-1941	TUBE,4X7X360		1	1			
92063	92063-1338 (OPTION)	JET-MAIN,#135		1	1			
92063A	92063-1359 (OPTION)	JET-MAIN,#138		1	1			
92063B	92063-1360	JET-MAIN,#140		1	1			
92063C	92063-1361 (OPTION)	JET-MAIN,#142		1	1			
92063D	92063-1362 (OPTION)	JET-MAIN,#145		1	1			
92063E	92063-1364 (OPTION)	JET-MAIN,#150		1	1			
92064	92064-1140 (OPTION)	JET-PILOT,#40		1	1			
92064A	92064-1141 (OPTION)	JET-PILOT,#42		1	1			
92064B	92064-1142	JET-PILOT,#45		1	1			
92064C	92064-1143 (OPTION)	JET-PILOT,#48		1	1			
92064D	92064-1144 (OPTION)	JET-PILOT,#50		1	1			
92081	92081-1555	SPRING,ADJUST SCREW		1	1			
92144	92144-1178	SPRING,FLOAT VALVE		1	1			
92144A	92144-1566	SPRING,THROTTLE VALVE		1	1			
92144B	92144-1782	SPRING,THROTTLE STOP SCREW		1	1			
92171	92171-1323	CLAMP		1	1			
92191	92191-1243	TUBE,4X7X560		1	1			
92191A	92191-1591	TUBE,4X7X420		1	1			
92191B	92191-1610	TUBE		1	1			
223	223AB0414	SCREW-PAN-WS-CROS,4X14		2	2			
223A	223AB0416	SCREW-PAN-WS-CROS,4X16		2	2			

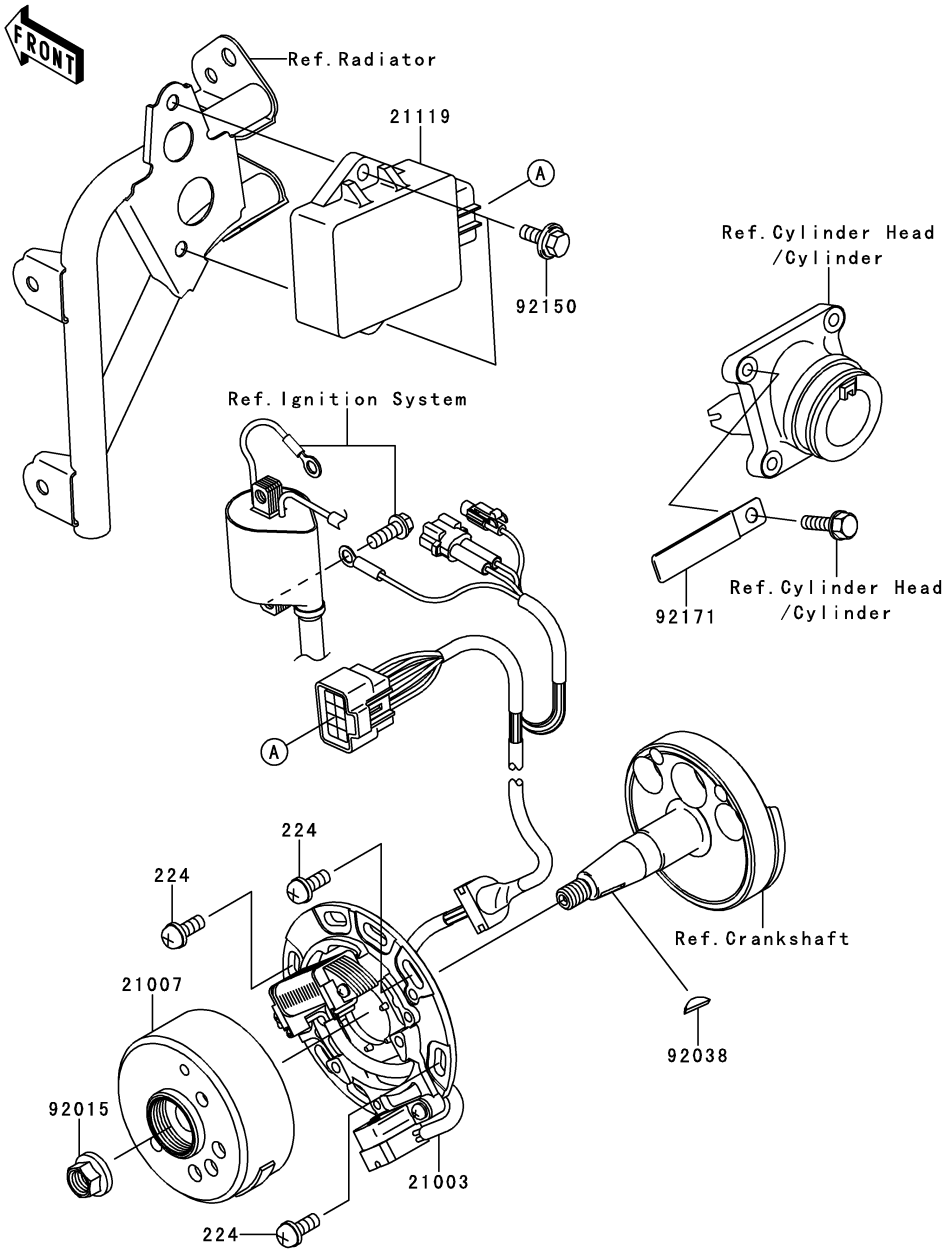

Ref. No.	Part No.	Description	Spec Code	Quantity-KX85				
				’12	’12			
				ACF	BCF			
21003	21003-0104	STATOR		1	1			
21007	21007-0073	ROTOR		1	1			
21119	21119-0048	IGNITER		1	1			
92015	92015-077	NUT,FLANGED,10MM		1	1			
92038	92038-001	KEY,WOODRUFF		1	1			
92150	92150-1506	BOLT,FLANGED,6X16		2	2			
92171	92171-0652	CLAMP		1	1			
224	224AA0614	SCREW-PAN-WP-CROS,6X14		3	3			

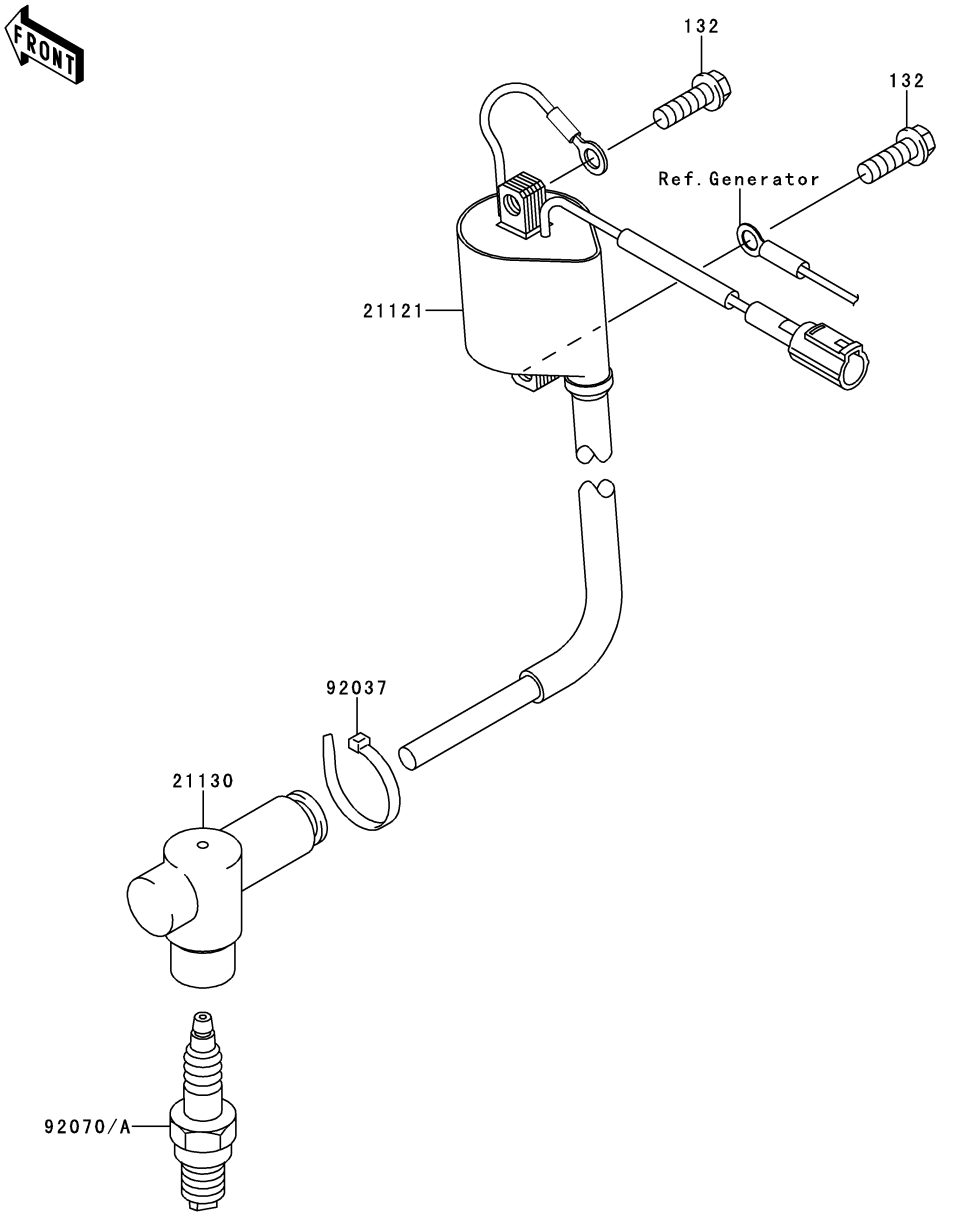

Ref. No.	Part No.	Description	Spec Code	Quantity-KX85 '12 ACF	'12 BCF			
21121	21121-0022	COIL-IGNITION		1	1			
21130	21130-1077	CAP-SPARK PLUG		1	1			
92037	92037-1173	CLAMP		1	1			
92070	92070-1228 (OPTION)	PLUG-SPARK,BR9EVX(NGK),SOLID		1	1			
92070A	92070-1241	PLUG-SPARK,R6252K-105NGK,SOLID		1	1			
132	132BC0618	BOLT-FLANGED-SMALL,6X18		2	2			

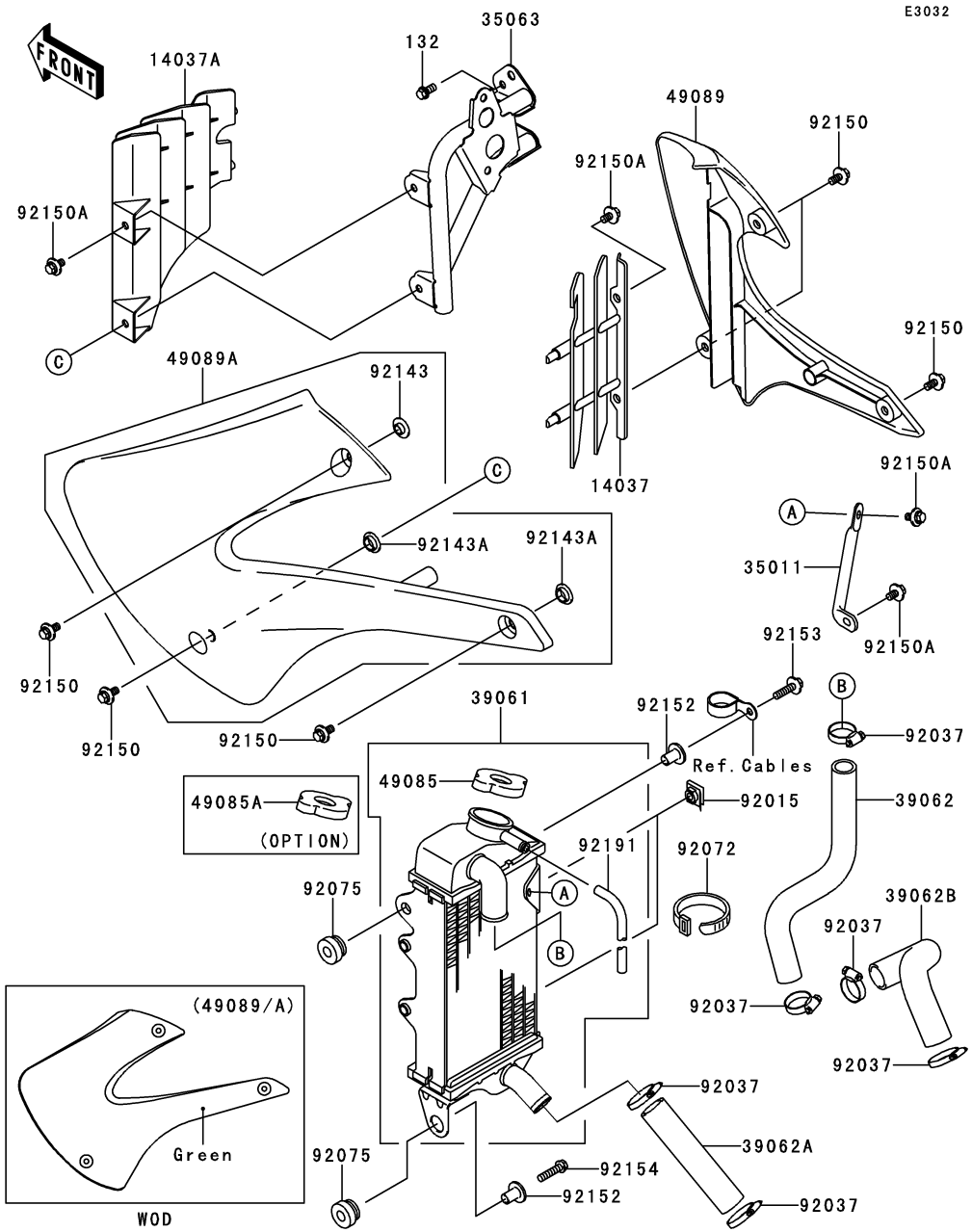

Ref. No.	Part No.	Description	Spec Code	Quantity-KX85 ’12 ACF	Quantity-KX85 ’12 BCF			
14037	14037-1249-6D	SCREEN,RH,BLACK		1	1			
14037A	14037-1282-6D	SCREEN,LH,BLACK		1	1			
35011	35011-1845	STAY		1	1			
35063	35063-1137	STAY		1	1			
39061	39061-1245	RADIATOR-ASSY		1	1			
39062	39062-1425	HOSE-COOLING,HEAD-RADIATOR		1	1			
39062A	39062-1711	HOSE-COOLING,RADIATOR-PUMP		1	1			
39062B	39062-1712	HOSE-COOLING,CYLINDER PUMP		1	1			
49085	49085-1070	CAP-ASSY-PRESSURE,P1.1		1	1			
49085A	49085-1073 (OPTION)	CAP-ASSY-PRESSURE,P1.6		1	1			
49089	49089-1139-290	SHROUD-ENGINE,RH,L.GREEN		1	1			
49089A	49089-1146-290	SHROUD-ENGINE,LH,L.GREEN		1	1			
92015	92015-1487	NUT		2	2			
92037	92037-1589	CLAMP,COOLING HOSE		6	6			
92072	92072-056	BAND,L=186		1	1			
92075	92075-1352	DAMPER		2	2			
92143	92143-1087	COLLAR		1	1			
92143A	92143-1196	COLLAR		2	2			
92150	92150-1340	BOLT,6X14		6	6			
92150A	92150-1435	BOLT,6X12		4	4			
92152	92152-0666	COLLAR		2	2			
92153	92153-1008	BOLT,FLANGED WP,6X25		1	1			
92154	92154-0520	BOLT,FLANGED,6X25		1	1			
92191	92191-1211	TUBE,6X9X700		1	1			
132	132BA0612	BOLT-FLANGED-SMALL,6X12		1	1			

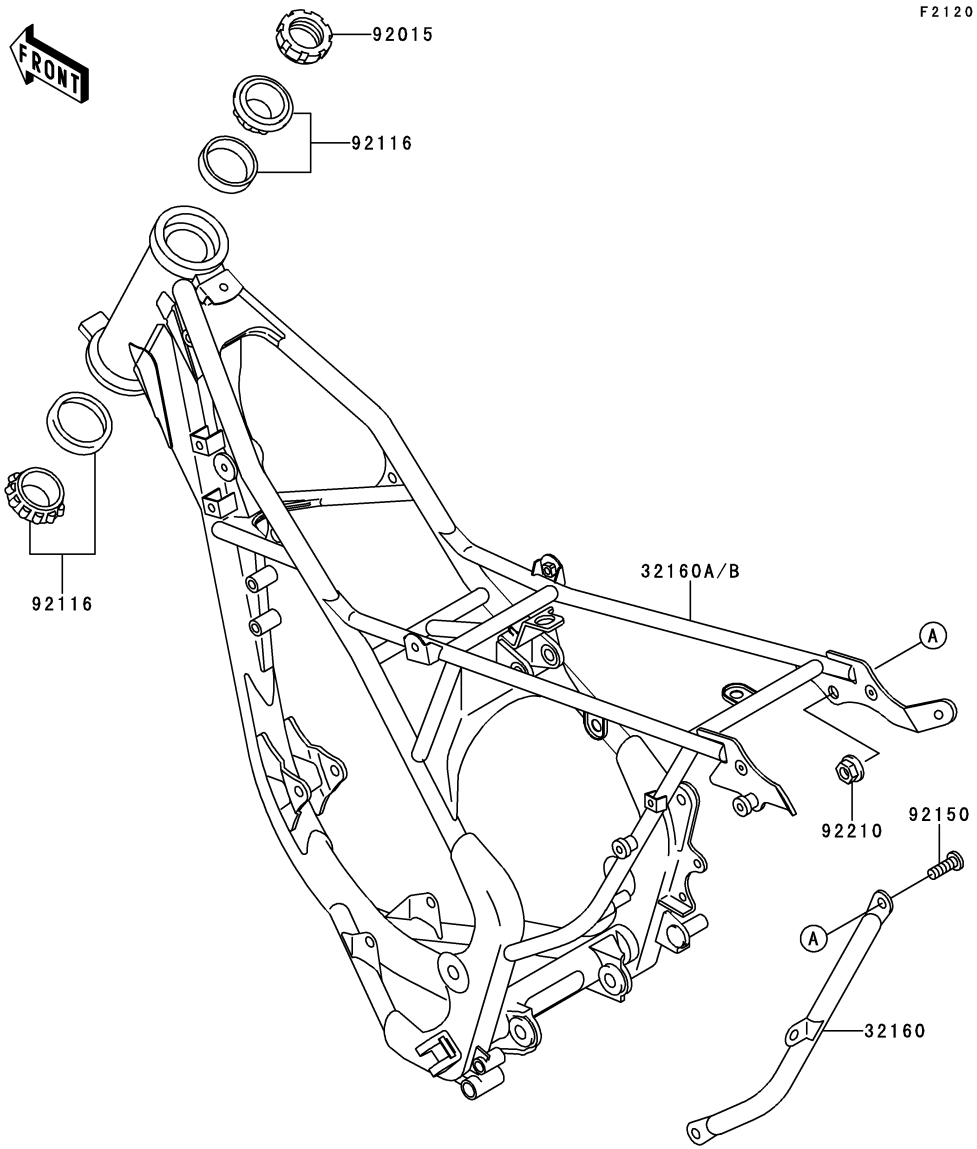

Ref. No.	Part No.	Description	Spec Code	Quantity-KX85 '12 ACF	'12 BCF			
32160	32160-1486-18R	FRAME-COMP,DOWNTUBE,RH,BLACK		1	1			
32160A	32160-1667-18R	FRAME-COMP,MAIN,F.S.BLACK		1				
32160B	32160-1673-18R	FRAME-COMP,MAIN,F.S.BLACK			1			
92015	92015-1684	NUT,STEERING STEM,25MM		1	1			
92116	92116-1065	BEARING-ROLLER,H1-CAP32005JRRS		2	2			
92150	92150-1221	BOLT,SOCKET,10X23		2	2			
92210	92210-1080	NUT,LOCK,FLANGED,10MM		2	2			

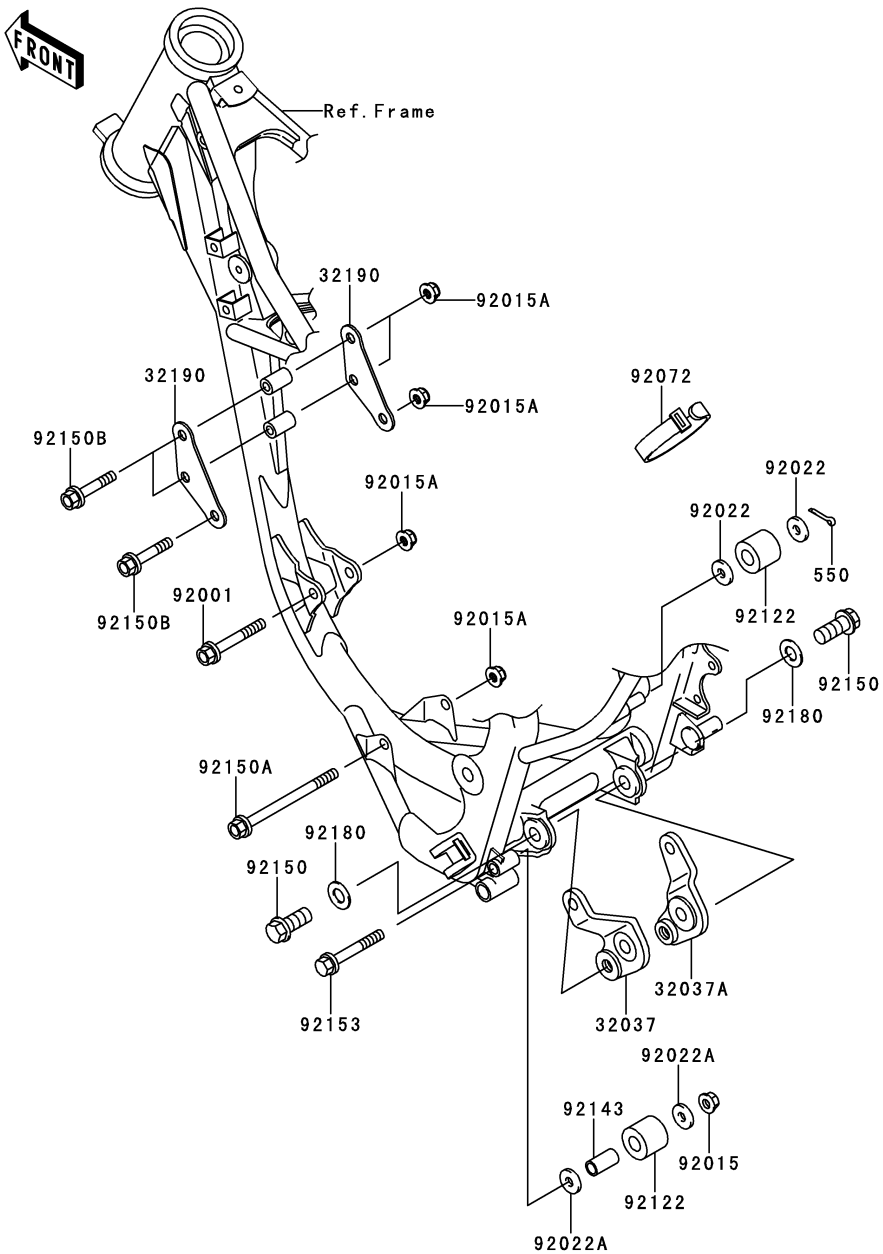

F2122

Ref. No.	Part No.	Description	Spec Code	Quantity-KX85 '12 ACF	'12 BCF			
32037	32037-1552	BRACKET-SHOCKABSORBER		1	1			
32037A	32037-1553	BRACKET-SHOCKABSORBER		1	1			
32190	32190-1119	BRACKET-ENGINE,HEAD		2	2			
92001	92001-1006	BOLT,FLANGED,8X63		1	1			
92015	92015-1406	NUT,FLANGED,8MM		1	1			
92015A	92015-1432	NUT,8MM		5	5			
92022	92022-107	WASHER		2	2			
92022A	92022-1561	WASHER,8.5X20X1.6		2	2			
92072	92072-1293	BAND,L=140		3	3			
92122	92122-1213	ROLLER,CHAIN GUIDE		2	2			
92143	92143-1432	COLLAR,9.5X12.7X25		1	1			
92150	92150-1359	BOLT,FLANGED,12X27		2	2			
92150A	92150-1482	BOLT,FLANGED,8X105		1	1			
92150B	92150-1487	BOLT,FLANGED,8X45		3	3			
92153	92153-1012	BOLT,FLANGED,8X60		1	1			
92180	92180-1060	SHIM,12.5X24X0.5		2	2			
550	550AA2518	PIN-COTTER,2.5X18		1	1			

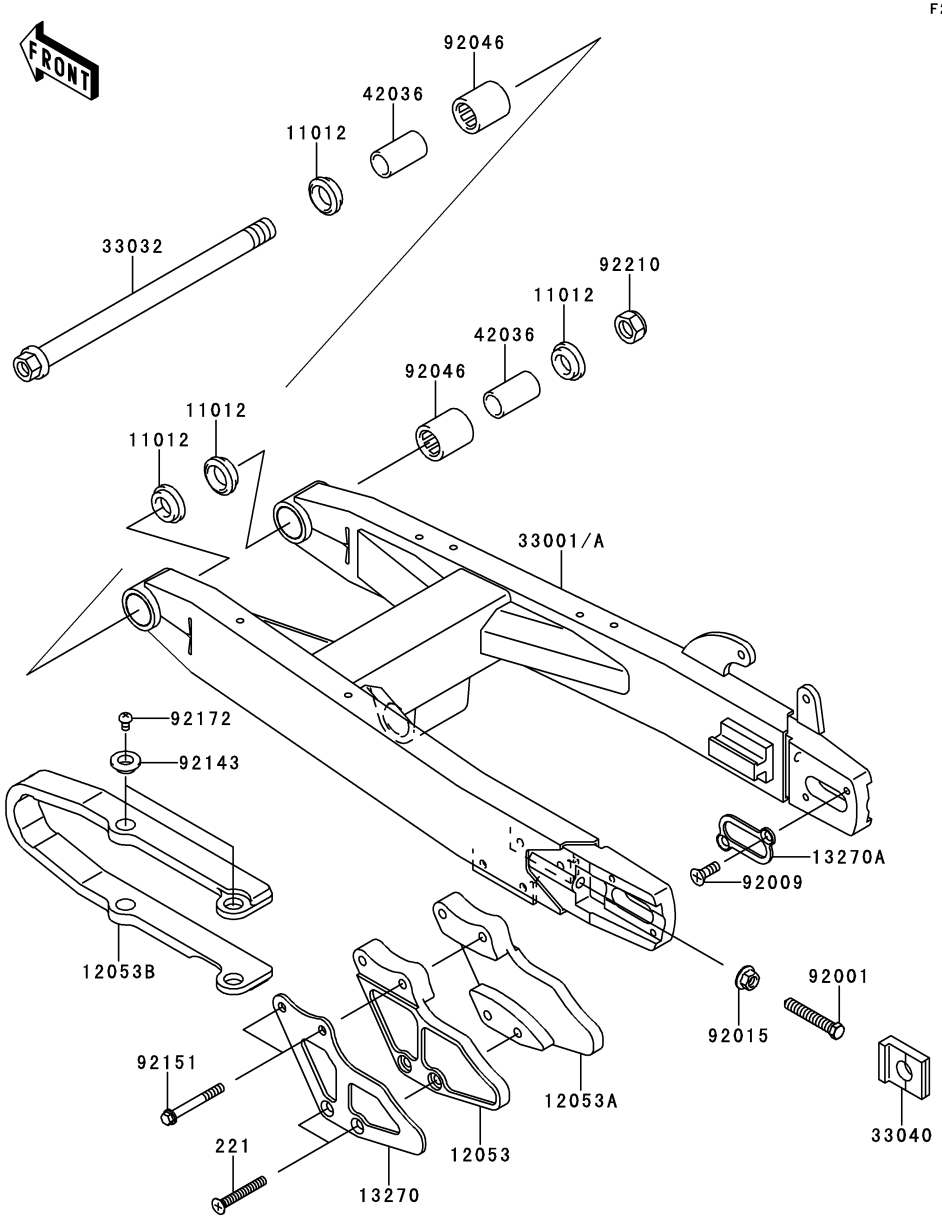

F2141

Ref. No.	Part No.	Description	Spec Code	Quantity-KX85 '12 ACF	'12 BCF			
11012	11012-1263	CAP		4	4			
12053	12053-1203	GUIDE-CHAIN,RR,LH		1	1			
12053A	12053-1204	GUIDE-CHAIN,RR,RH		1	1			
12053B	12053-1414	GUIDE-CHAIN,FR		1	1			
13270	13270-1829	PLATE,GUIDE CHAIN		1	1			
13270A	13270-1899	PLATE		2	2			
33001	33001-1542-458	ARM-COMP-SWING,P.SILVER		1				
33001A	33001-1543-458	ARM-COMP-SWING,P.SILVER			1			
33032	33032-1161	SHAFT-SWING ARM		1	1			
33040	33040-1173	ADJUSTER-CHAIN		2	2			
42036	42036-1067	SLEEVE,SWING ARM,L=34		2	2			
92001	92001-1179	BOLT,8X46		2	2			
92009	92009-1828	SCREW,5X10		4	4			
92015	92015-1014	NUT,FLANGED,8MM		2	2			
92046	92046-1046	BEARING-NEEDLE		2	2			
92143	92143-1676	COLLAR		4	4			
92151	92151-1234	BOLT,6X50		2	2			
92172	92172-0119	SCREW,5X8		4	4			
92210	92210-1249	NUT,LOCK,12MM		1	1			
221	221AA0645	SCREW-CSK-CROSS,6X45		2	2			

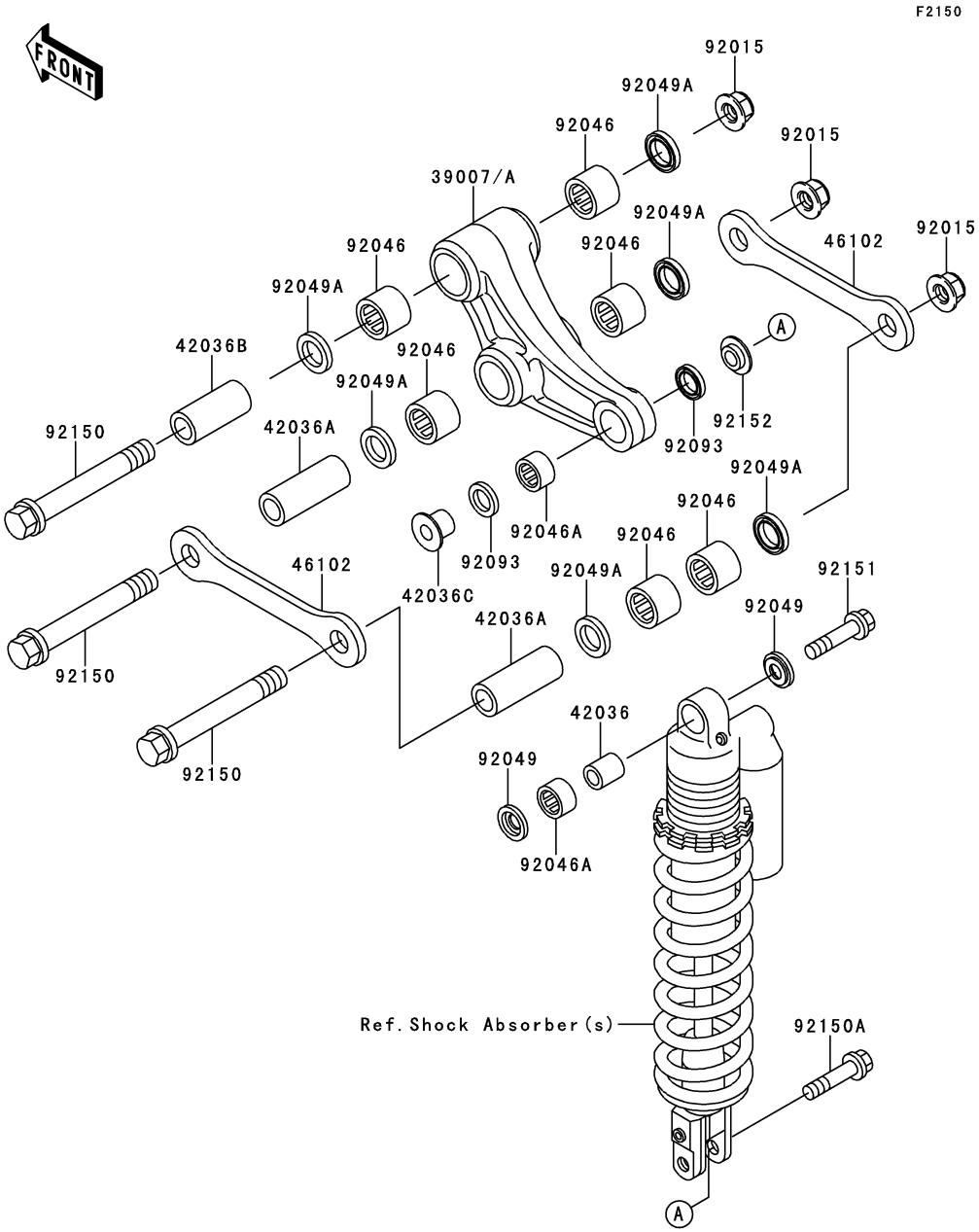

Ref. No.	Part No.	Description	Spec Code	Quantity-KX85 '12 ACF	Quantity-KX85 '12 BCF			
39007	39007-1261	ARM-SUSP,UNI TRAK		1				
39007A	39007-1262	ARM-SUSP,UNI TRAK			1			
42036	42036-1248	SLEEVE,10X16X19		1	1			
42036A	42036-1273	SLEEVE,12X18X57		2	2			
42036B	42036-1274	SLEEVE,12X18X49		1	1			
42036C	42036-1351	SLEEVE		1	1			
46102	46102-1291	ROD,SUSPENSION		2	2			
92015	92015-1433	NUT,LOCK,FLANGED,12MM		3	3			
92046	92046-1144	BEARING-NEEDLE,18BM2416		6	6			
92046A	92046-1192	BEARING-NEEDLE,16BM2212		2	2			
92049	92049-0069	SEAL-OIL		2	2			
92049A	92049-1328	SEAL-OIL		6	6			
92093	92093-1436	SEAL		2	2			
92150	92150-1412	BOLT,FLANGED,12X83		3	3			
92150A	92150-1711	BOLT,FLANGED,10X40		1	1			
92151	92151-1413	BOLT,FLANGED,10X45		1	1			
92152	92152-1139	COLLAR		1	1			

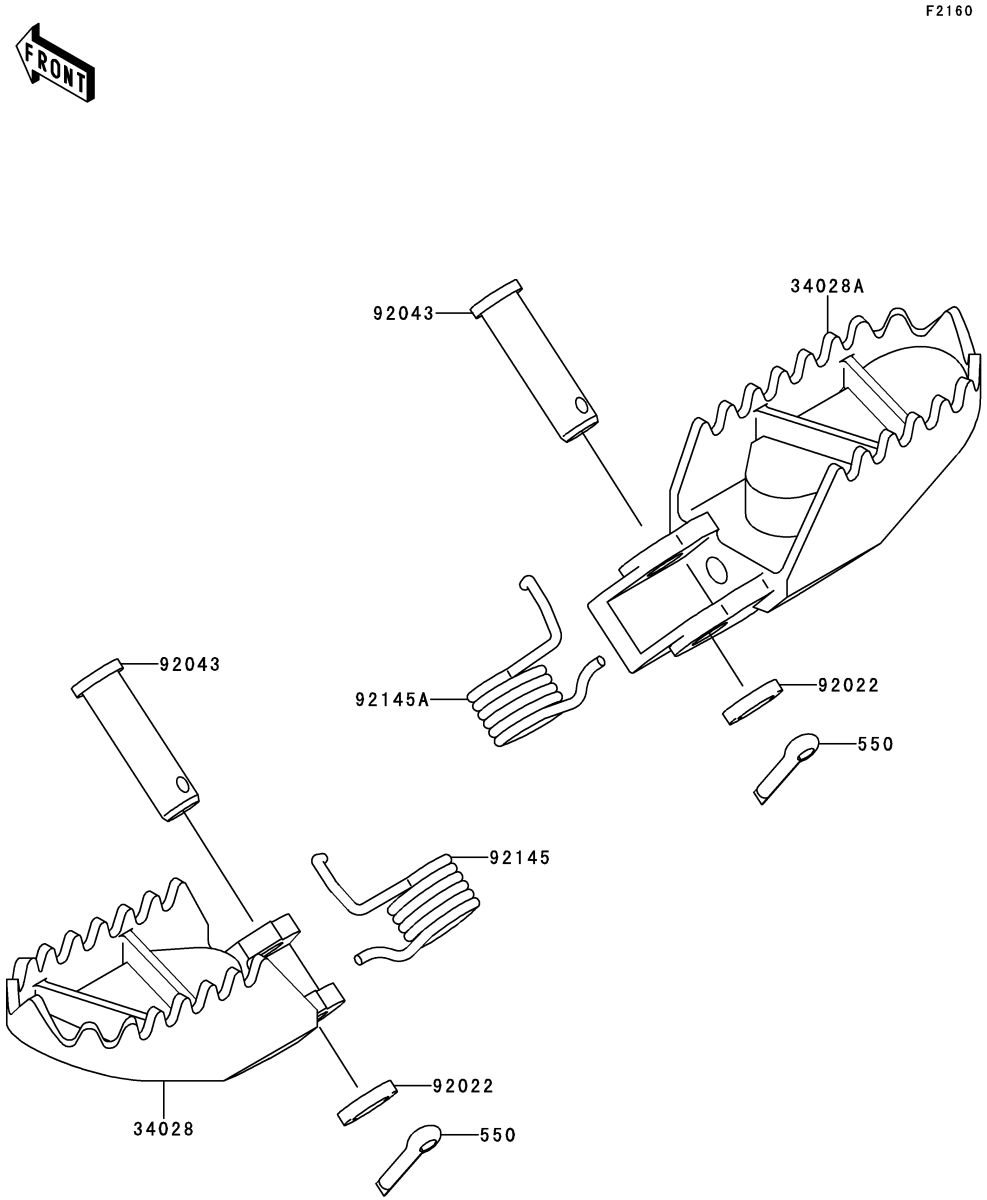

Ref. No.	Part No.	Description	Spec Code	Quantity-KX85 '12 ACF	'12 BCF			
34028	34028-1498-CE	STEP,LH,SILVER		1	1			
34028A	34028-1499-CE	STEP,RH,SILVER		1	1			
92022	92022-1829	WASHER,10.2X16X1		2	2			
92043	92043-1643	PIN,10X37.5		2	2			
92145	92145-1106	SPRING,STEP,LH		1	1			
92145A	92145-1107	SPRING,STEP,RH		1	1			
550	550S3020	PIN-COTTER,3.0X20		2	2			

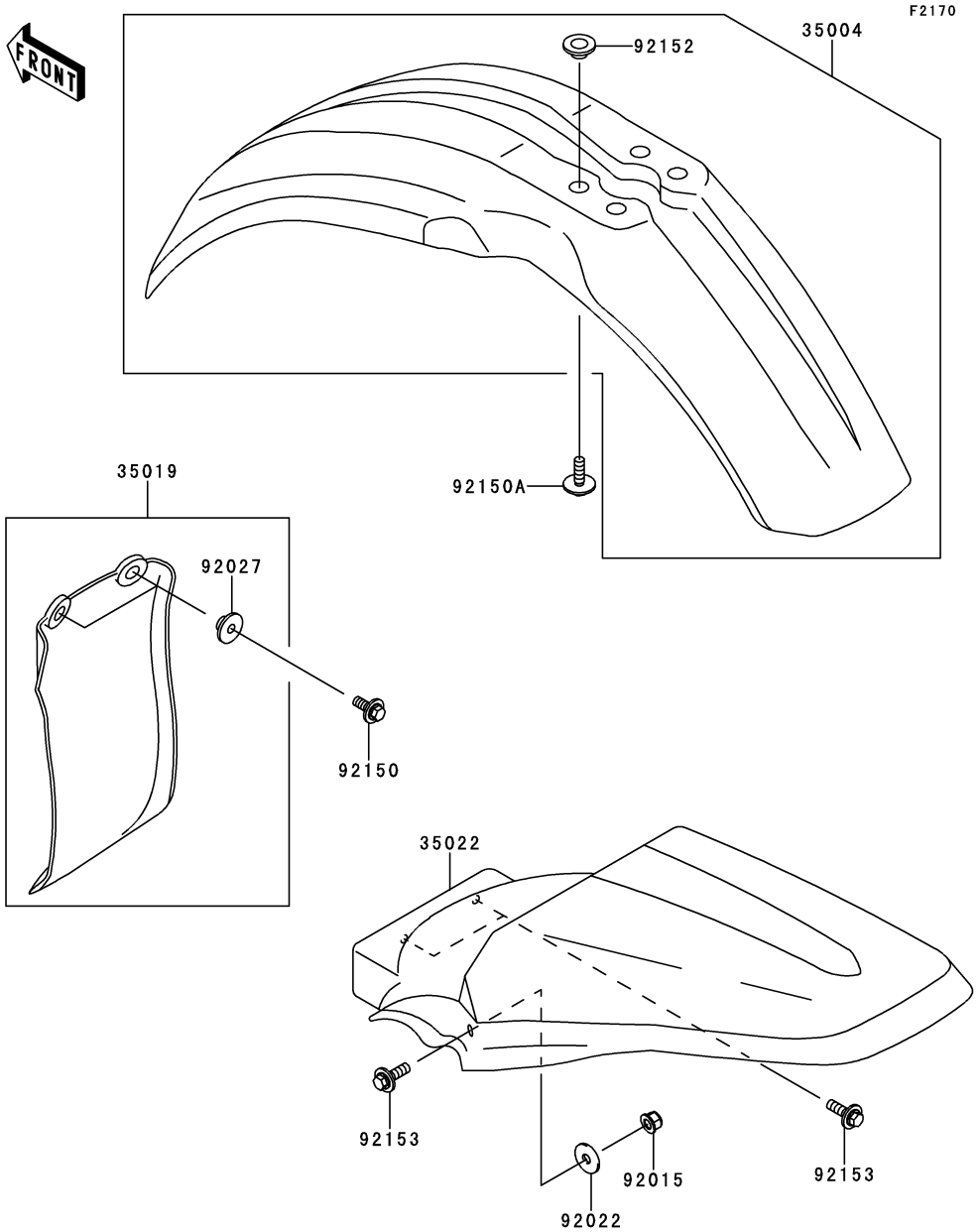

Ref. No.	Part No.	Description	Spec Code	Quantity-KX85 '12 ACF	'12 BCF			
35004	35004-0028-290	FENDER-FRONT,L.GREEN		1	1			
35019	35019-0080	FLAP,REAR FENDER		1	1			
35022	35022-1353-290	FENDER-COMP-REAR,L.GREEN		1	1			
92015	92015-1339	NUT,LOCK,FLANGED,6MM		2	2			
92022	92022-125	WASHER,6.5X20X1.6		2	2			
92027	92027-1757	COLLAR		2	2			
92150	92150-1506	BOLT,FLANGED,6X16		2	2			
92150A	92150-1801	BOLT,6X20		4	4			
92152	92152-1255	COLLAR		4	4			
92153	92153-0502	BOLT,6X20		4	4			

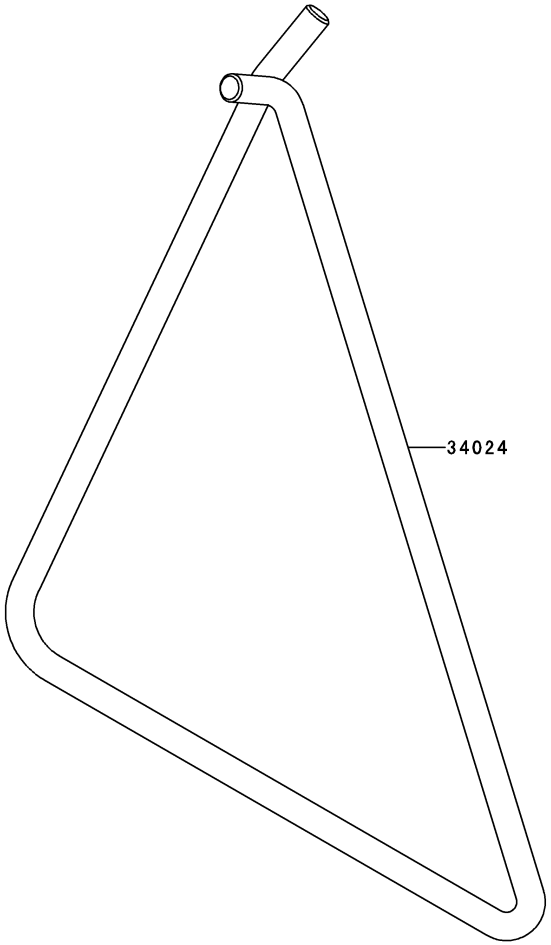

F2190

Ref. No.	Part No.	Description	Spec Code	Quantity-KX85				
				’12	’12			
				ACF	BCF			
34024	34024-1404-458	STAND-SIDE,P.SILVER		1	1			

F2210

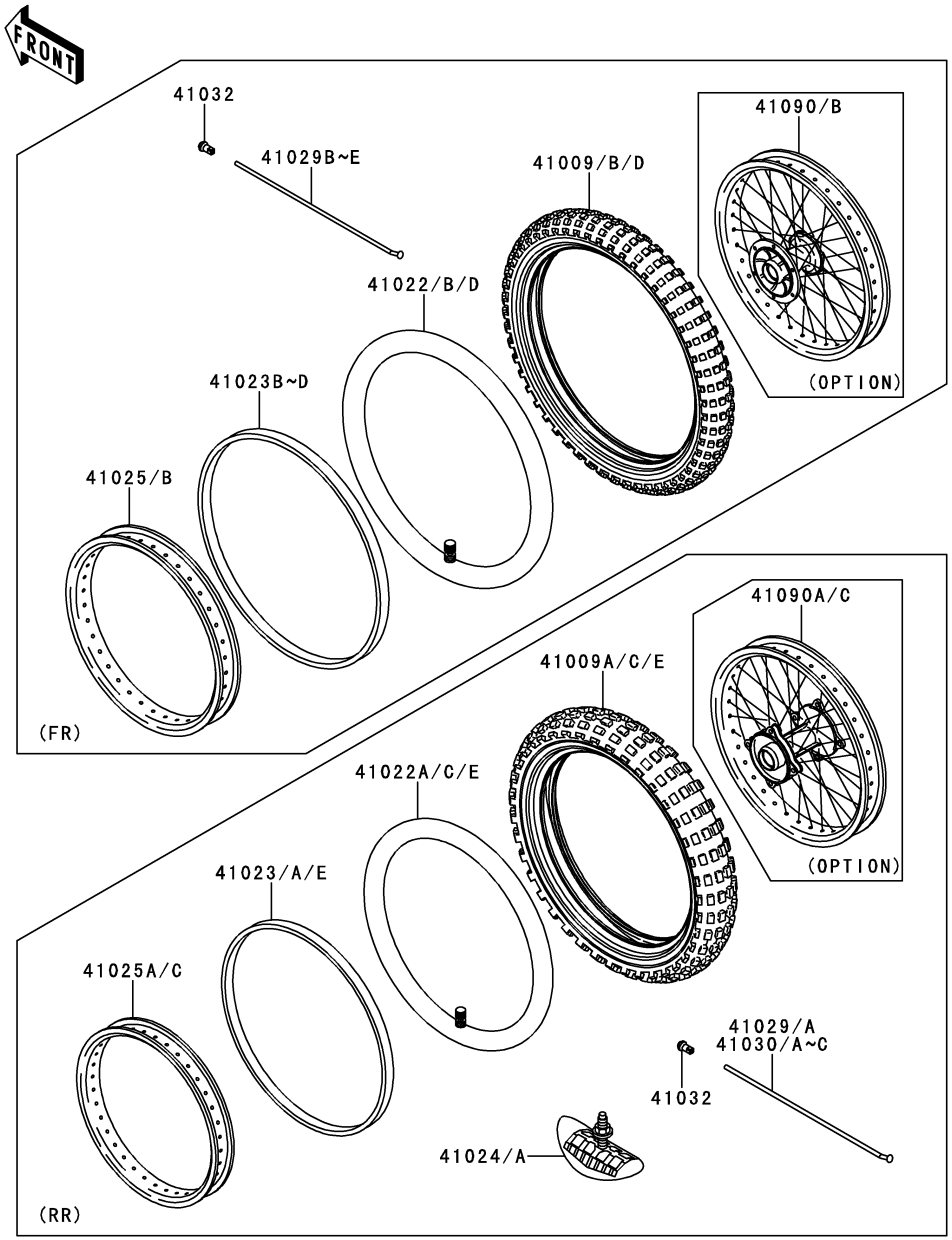

Ref. No.	Part No.	Description	Spec Code	Quantity-KX85 '12 ACF	Quantity-KX85 '12 BCF			
41009	41009-0051	TIRE,FR,70/100-19 42M,M401(BS)						
	L- -		AS		1			
41009A	41009-0052	TIRE,RR,90/100-16 52M,M402(BS)						
	L- -		AS		1			
41009B	41009-0113	TIRE,FR,70/100-17 40M,D756F(D)		1				
41009C	41009-0114	TIRE,RR,90/100-14 49M,D756(D)		1				
41009D	41009-0115	TIRE,FR,70/100-19 42M,D756F(D)						
	L- -		EU		1			
41009E	41009-0116	TIRE,RR,90/100-16 52M,D756(D)						
	L- -		EU		1			
41022	41022-1121	TUBE-TIRE,FR,70/100-19(D)						
	L- -		EU		1			
41022A	41022-1122	TUBE-TIRE,RR,90/100-16(D)						
	L- -		EU		1			
41022B	41022-1124	TUBE-TIRE,70/100-17(D)		1				
41022C	41022-1125	TUBE-TIRE,90/100-14(D)		1				
41022D	41022-1203	TUBE-TIRE,70/100-19(BS)						
	L- -		AS		1			
41022E	41022-1204	TUBE-TIRE,90/100-16(BS)						
	L- -		AS		1			
41023	41023-1068	BAND-RIM,80/100-14(D)		1				
41023A	41023-1072	BAND-RIM,RR,90/100-16(D)						
	L- -		EU		1			
41023B	41023-1074	BAND-RIM,90.100/90-19(D)						
	L- -		EU		1			
41023C	41023-1082	BAND-RIM,100/90-17(D)		1				
41023D	41023-1122	BAND-RIM,X-19(BS)						
	L- -		AS		1			
41023E	41023-1123	BAND-RIM,X-16A(BS)						
	L- -		AS		1			
41024	41024-010	STOPPER-RIM,1.60-M(DUNLOP)		1				
41024A	41024-011	STOPPER-RIM,1.85-M(DUNLOP)			1			
41025	41025-0131-WC	RIM,FR,1.40X17,BLACK		1				
41025A	41025-0132-WC	RIM,RR,1.60X14,BLACK		1				
41025B	41025-0133-WC	RIM,FR,1.40X19,BLACK			1			
41025C	41025-0134-WC	RIM,RR,1.85X16,BLACK			1			
41029	41029-1274	SPOKE-INNER,RR,157MMX170D		14				
41029A	41029-1278	SPOKE-INNER,RR,179MMX170D			14			
41029B	41029-1288	SPOKE-INNER,FR,RH,211MMX165D			14			
41029C	41029-1289	SPOKE-INNER,FR,LH,207MMX165D			14			
41029D	41029-1290	SPOKE-INNER,FR,RH,187MMX166D		14				
41029E	41029-1291	SPOKE-INNER,FR,LH,183MMX166D		14				

F2210

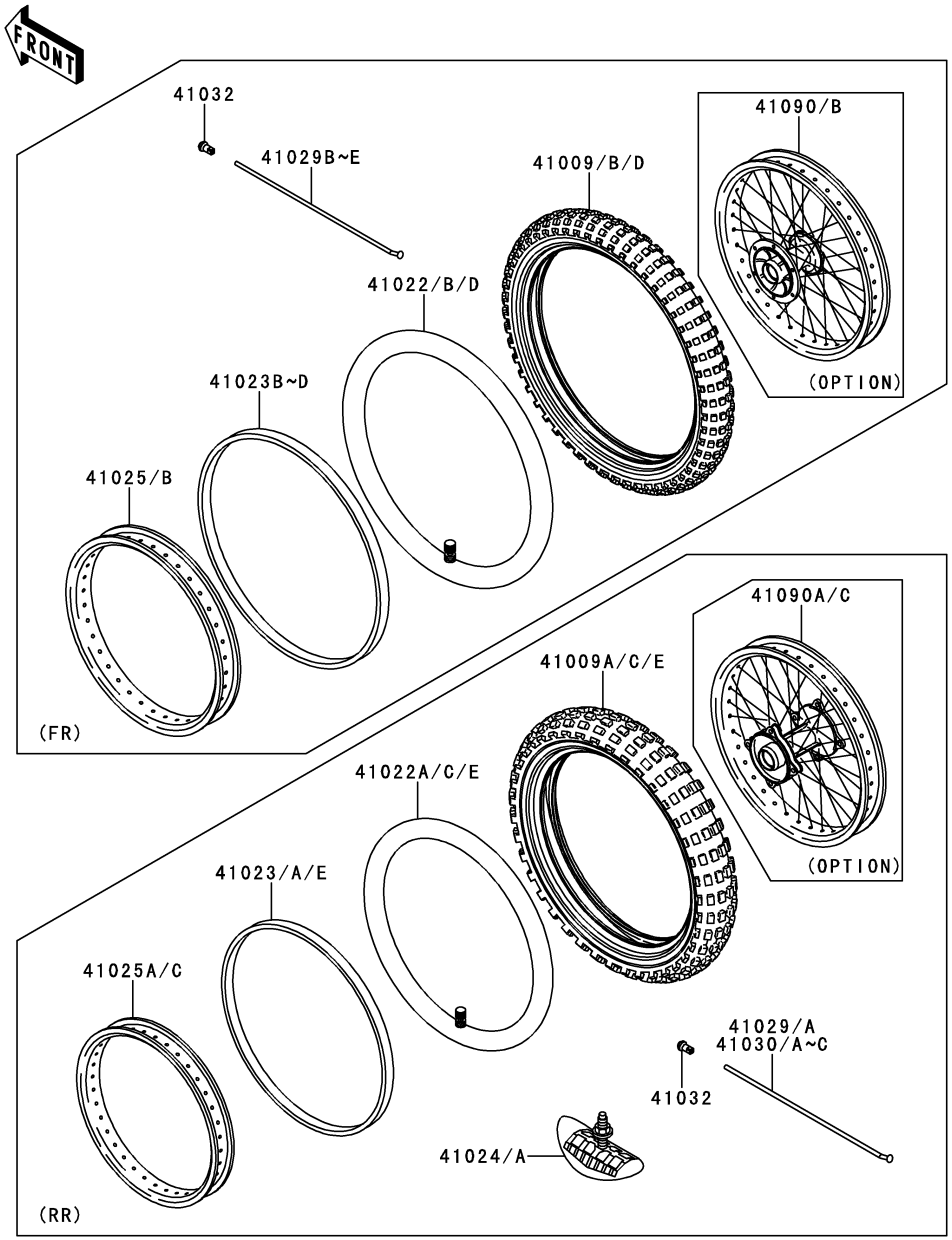

Ref. No.	Part No.	Description	Spec Code	Quantity-KX85 '12 ACF	Quantity-KX85 '12 BCF			
41030	41030-1150	SPOKE-OUTER,RR,RH,149MMX172D		7				
41030A	41030-1151	SPOKE-OUTER,RR,RH,171MMX170D			7			
41030B	41030-1160	SPOKE-OUTER,RR,LH,153MMX172D		7				
41030C	41030-1161	SPOKE-OUTER,RR,LH,175MMX170D			7			
41032	41032-1077	NIPPLE-SPOKE,8X9X20(+),STEEL		56	56			
41090	41090-0101-WC (OPTION)	WHEEL,FR,1.40X17,BLACK		1				
41090A	41090-0102-WC (OPTION)	WHEEL,RR,1.60X14,BLACK		1				
41090B	41090-0103-WC (OPTION)	WHEEL,FR,1.40X19,BLACK			1			
41090C	41090-0104-WC (OPTION)	WHEEL,RR,1.85X16,BLACK			1			

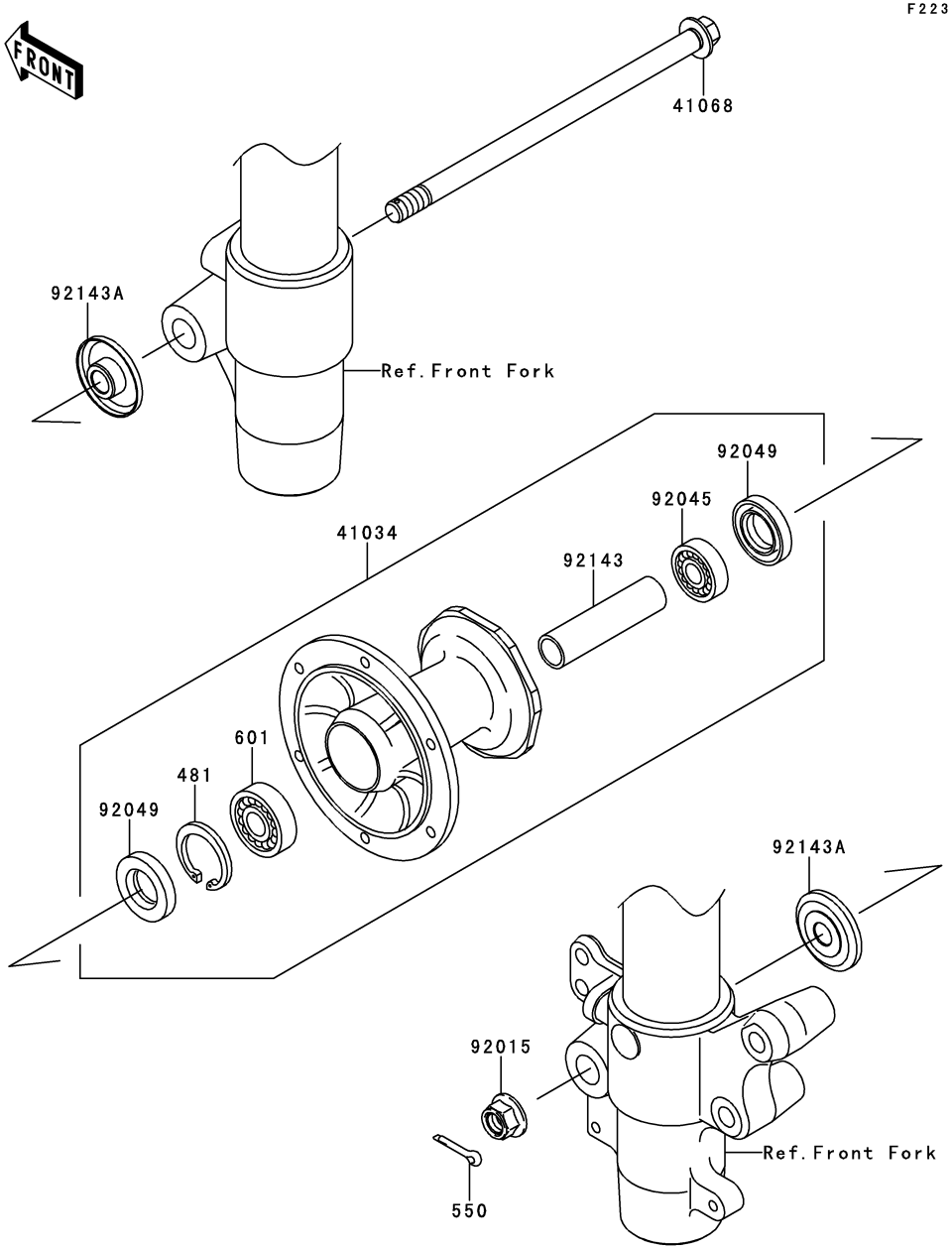

F2230

Ref. No.	Part No.	Description	Spec Code	Quantity-KX85 '12 ACF	'12 BCF			
41034	41034-1310	DRUM-ASSY,FRONT BRAKE		1	1			
41068	41068-1333	AXLE,FR		1	1			
92015	92015-1433	NUT,LOCK,FLANGED,12MM		1	1			
92045	92045-1062	BEARING-BALL,TMB201LLUC3/2A		1	1			
92049	92049-1257	SEAL-OIL,TC20376.5		2	2			
92143	92143-1935	COLLAR,FR BRAKE DRUM,L=76		1	1			
92143A	92143-1936	COLLAR,FR AXLE,L=12		2	2			
481	481J3700	CIRCLIP-TYPE-C,37MM		1	1			
550	550AA2520	PIN-COTTER,2.5X20		1	1			
601	601B6301UU	BEARING-BALL,#6201UUC3		1	1			

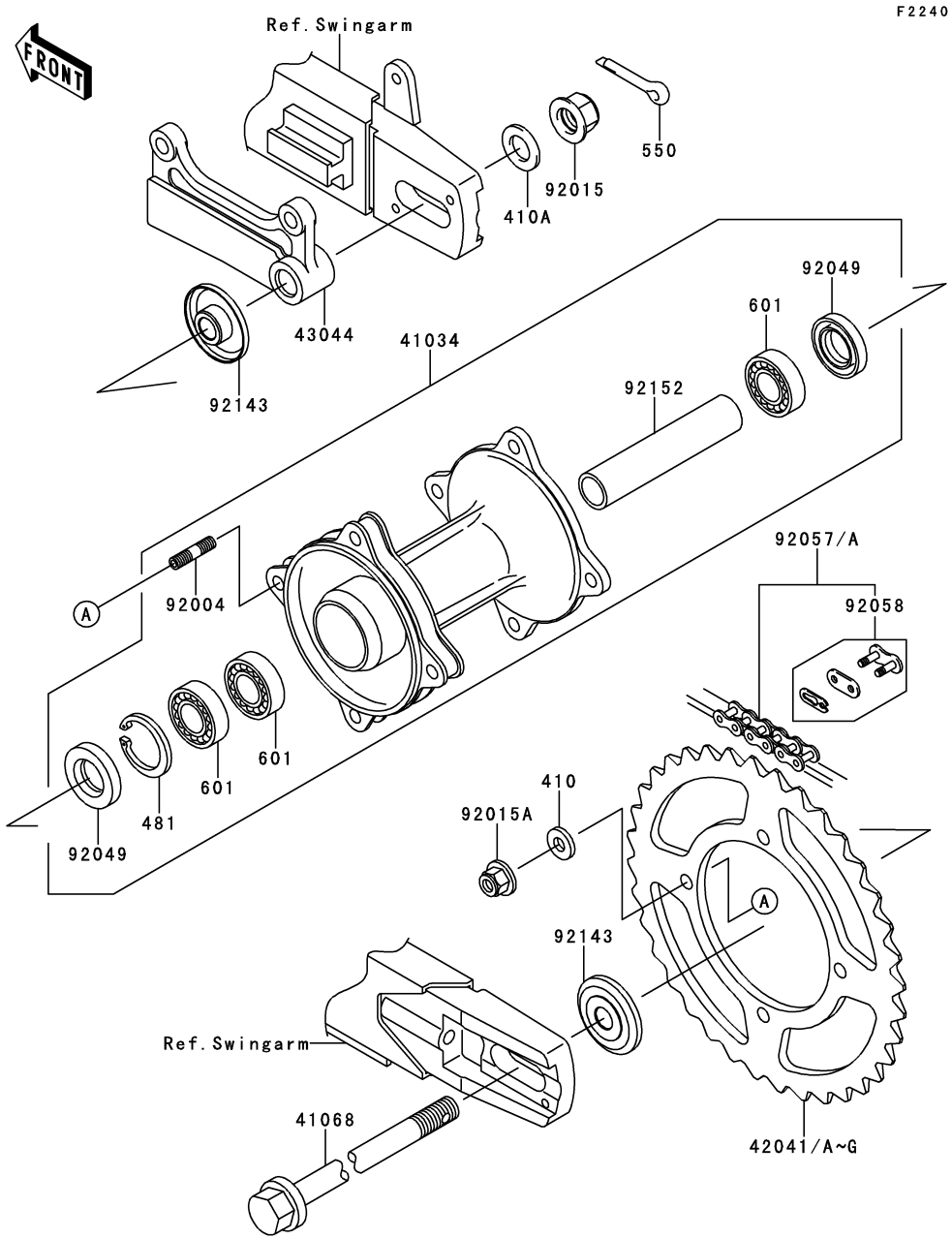

Ref. No.	Part No.	Description	Spec Code	Quantity-KX85 '12 ACF	'12 BCF			
41034	41034-1323	DRUM-ASSY,REAR BRAKE		1	1			
41068	41068-1401	AXLE,RR		1	1			
42041	42041-1207 (OPTION)	SPROCKET-HUB,49T		1	1			
42041A	42041-1227 (OPTION)	SPROCKET-HUB,48T		1				
42041B	42041-1228	SPROCKET-HUB,50T		1				
42041C	42041-1228 (OPTION)	SPROCKET-HUB,50T			1			
42041D	42041-1229	SPROCKET-HUB,51T			1			
42041E	42041-1229 (OPTION)	SPROCKET-HUB,51T		1				
42041F	42041-1245 (OPTION)	SPROCKET-HUB,52T		1	1			
42041G	42041-1246 (OPTION)	SPROCKET-HUB,53T			1			
43044	43044-1122	HOLDER-COMP-CALIPER		1	1			
92004	92004-1183	STUD,8X16		4	4			
92015	92015-1401	NUT,FLANGED,14MM		1	1			
92015A	92015-1432	NUT,8MM		4	4			
92049	92049-1469	SEAL-OIL		2	2			
92057	92057-1496	CHAIN,DRIVE,DID420DS2X120L		1				
92057A	92057-1497	CHAIN,DRIVE,DID420DS2X124L			1			
92058	92058-1086	JOINT-CHAIN,DRIVE		1	1			
92143	92143-1938	COLLAR,RR AXLE,L=12.5		2	2			
92152	92152-1090	COLLAR,RR BRAKE DRUM,L=95		1	1			
410	410AA0800	WASHER-PLAIN-SMALL,8MM		4	4			
410A	410AA1400	WASHER-PLAIN-SMALL,14MM		1	1			
481	481J3500	CIRCLIP-TYPE-C,35MM		1	1			
550	550AA2520	PIN-COTTER,2.5X20		1	1			
601	601B6202UU	BEARING-BALL		3	3			

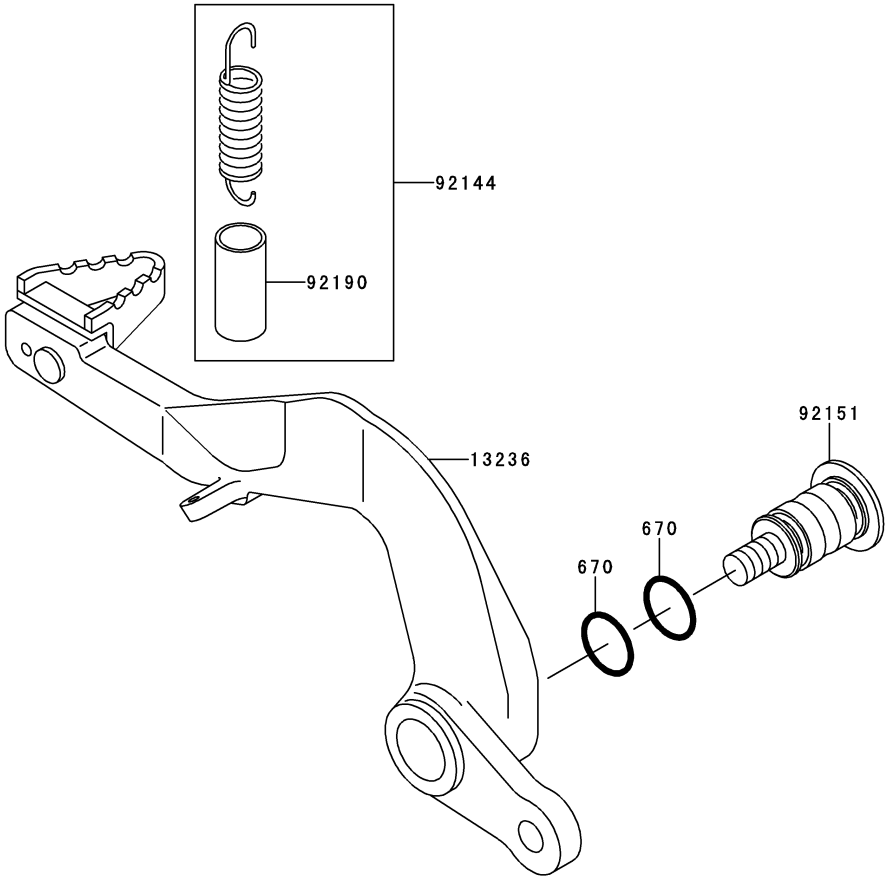

Ref. No.	Part No.	Description	Spec Code	Quantity-KX85				
				’12	’12			
				ACF	BCF			
13236	13236-1353	LEVER-COMP,BRAKE PEDAL,ALUM.		1	1			
92144	92144-1752	SPRING,BRAKE PEDAL RETURN		1	1			
92151	92151-1572	BOLT,BRAKE PEDAL,8MM		1	1			
92190	92190-1488	TUBE,13X16X25		1	1			
670	670B2012	O RING,12MM		2	2			

GRID NO. **E-3**

This grid covers:
Shock Absorber(s)

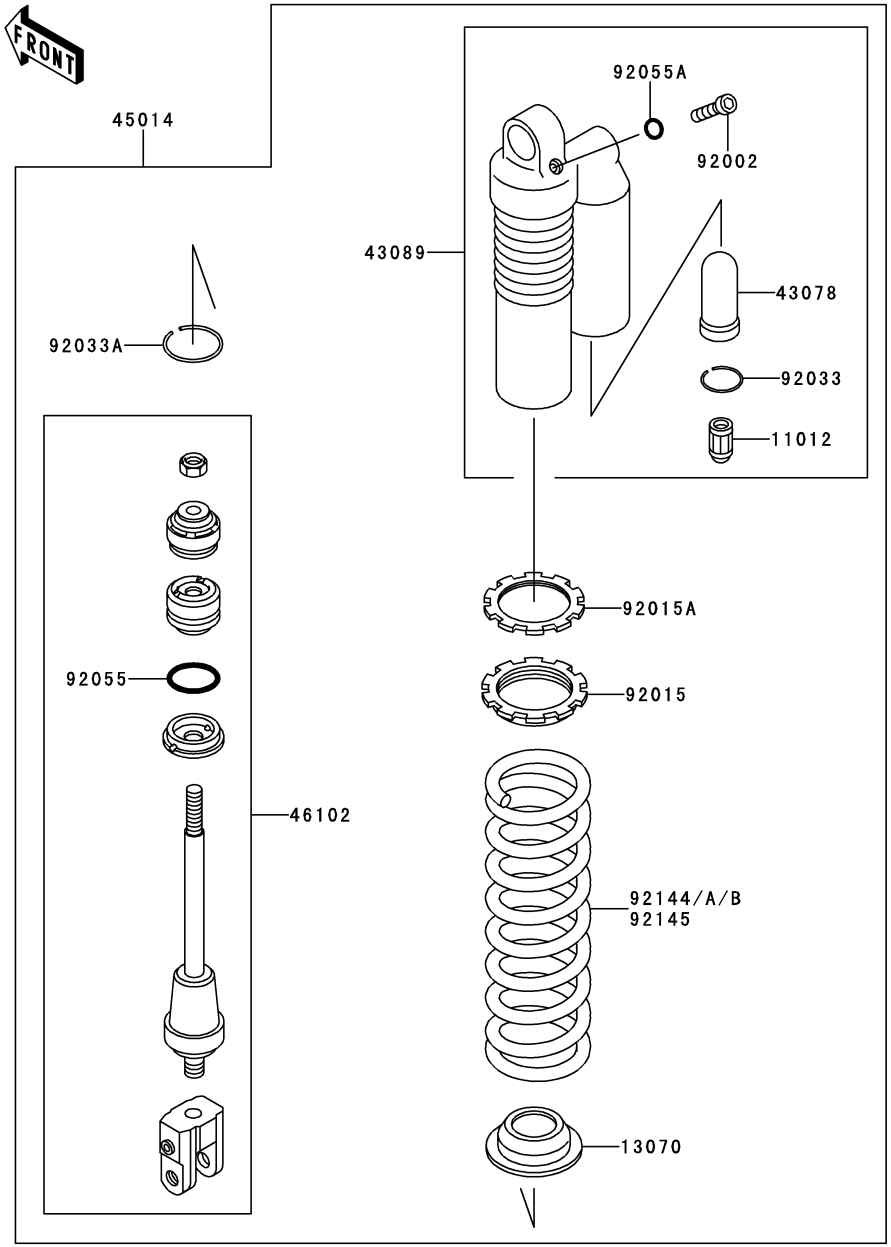

F2280

Ref. No.	Part No.	Description	Spec Code	Quantity-KX85 '12 ACF	'12 BCF			
11012	11012-1391	CAP,VALVE AIR		1	1			
13070	13070-1233	GUIDE,SPRING		1	1			
43078	43078-1112	RESERVOIR,SHOCKABSORBER		1	1			
43089	43089-0008-829	CYLINDER-SHOCKABSORBER,GOLD		1	1			
45014	45014-5045	SHOCKABSORBER		1	1			
46102	46102-1411	ROD,SHOCKABSORBER		1	1			
92002	92002-1955	BOLT,DRAIN		1	1			
92015	92015-1679	NUT,SPRING ADJUST		1	1			
92015A	92015-1713	NUT,SPRING ADJUST LOCK		1	1			
92033	92033-1091	RING-SNAP,REARSHOCK		1	1			
92033A	92033-1211	RING-SNAP,SHOCKABSORBER		1	1			
92055	92055-1334	RING-O,ROD		1	1			
92055A	92055-1383	RING-O		1	1			
92144	92144-1570-17D (OPTION)	SPRING,SHOCK,K=45.1N/MM,BLACK		1	1			
92144A	92144-1571-17D (OPTION)	SPRING,SHOCK,K=49.0N/MM,BLACK		1	1			
92144B	92144-1945-17D	SPRING,SHOCK,K=47.0N/MM,BLACK		1	1			
92145	92145-1371-17D (OPTION)	SPRING,SHOCK,K=43.1N/MM,BLACK		1	1			

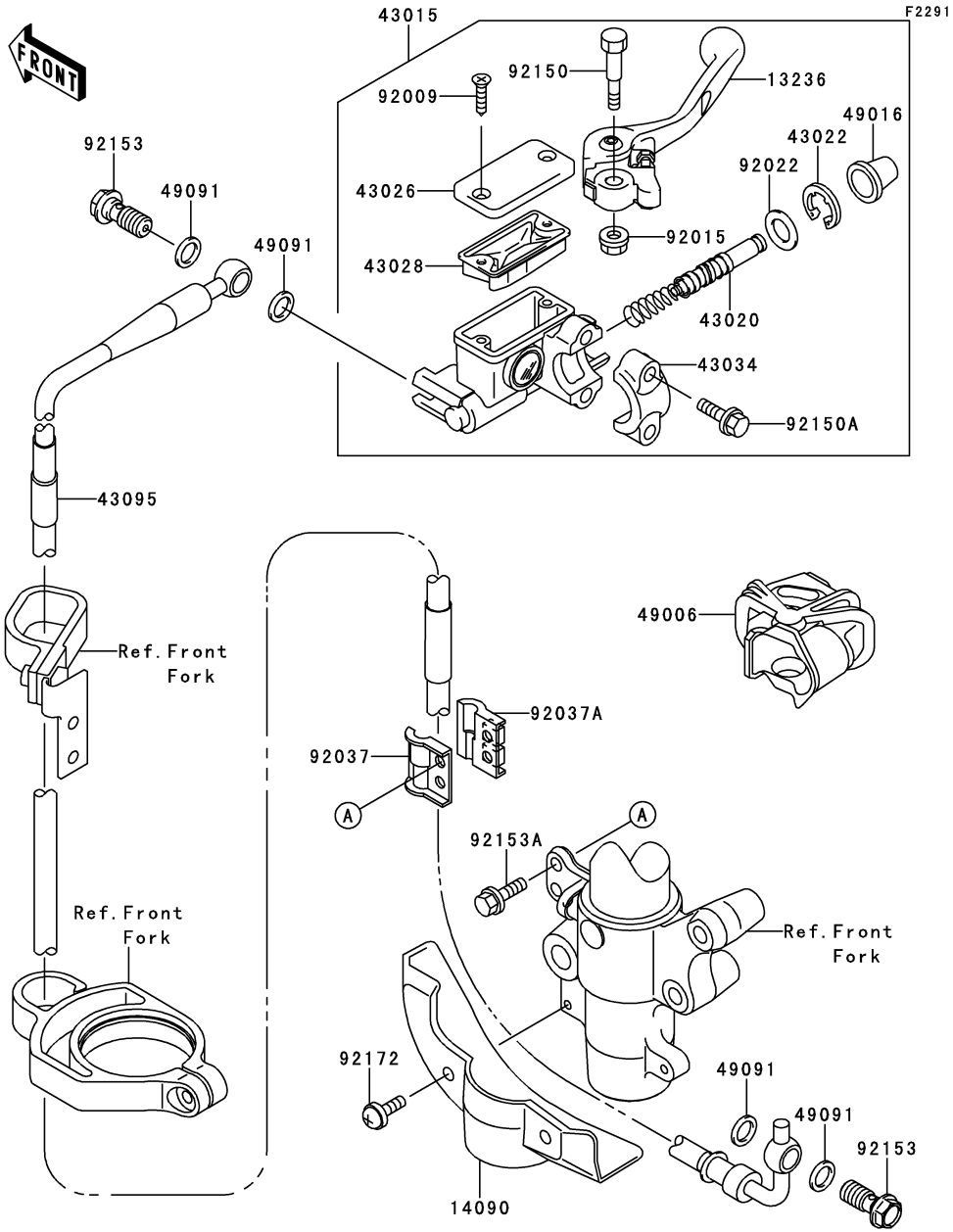

Ref. No.	Part No.	Description	Spec Code	Quantity-KX85 '12 ACF	'12 BCF			
13236	13236-1346	LEVER-COMP,FRONT BRAKE		1	1			
14090	14090-1860-6D	COVER,BRAKE HOSE,BLACK		1	1			
43015	43015-0145	CYLINDER-ASSY-MASTER		1	1			
43020	43020-1123	PISTON-COMP-BRAKE		1	1			
43022	43022-1010	STOPPER-BRAKE,PISTON		1	1			
43026	43026-0020	CAP-BRAKE,MASTER CYLINDER		1	1			
43028	43028-1067	DIAPHRAGM		1	1			
43034	43034-1110	HOLDER-BRAKE		1	1			
43095	43095-1091	HOSE-BRAKE,FR		1	1			
49006	49006-0078	BOOT,FRONT BRAKE LEVER		1	1			
49016	49016-1044	COVER-SEAL,MASTER CYLINDER		1	1			
49091	49091-0001	WASHER-SEAL,10.1X14.5X1.5		4	4			
92009	92009-1458	SCREW,4MM		2	2			
92015	92015-1528	NUT,FLANGED,6MM		1	1			
92022	92022-1814	WASHER		1	1			
92037	92037-1362	CLAMP,BRAKE HOSE,OUTSIDE		1	1			
92037A	92037-1363	CLAMP,BRAKE HOSE,INSIDE		1	1			
92150	92150-1451	BOLT,LEVER SET		1	1			
92150A	92150-1452	BOLT		2	2			
92153	92153-0627	BOLT,OIL,L=23		2	2			
92153A	92153-0695	BOLT,6X16		2	2			
92172	92172-0401	SCREW,6X14		2	2			

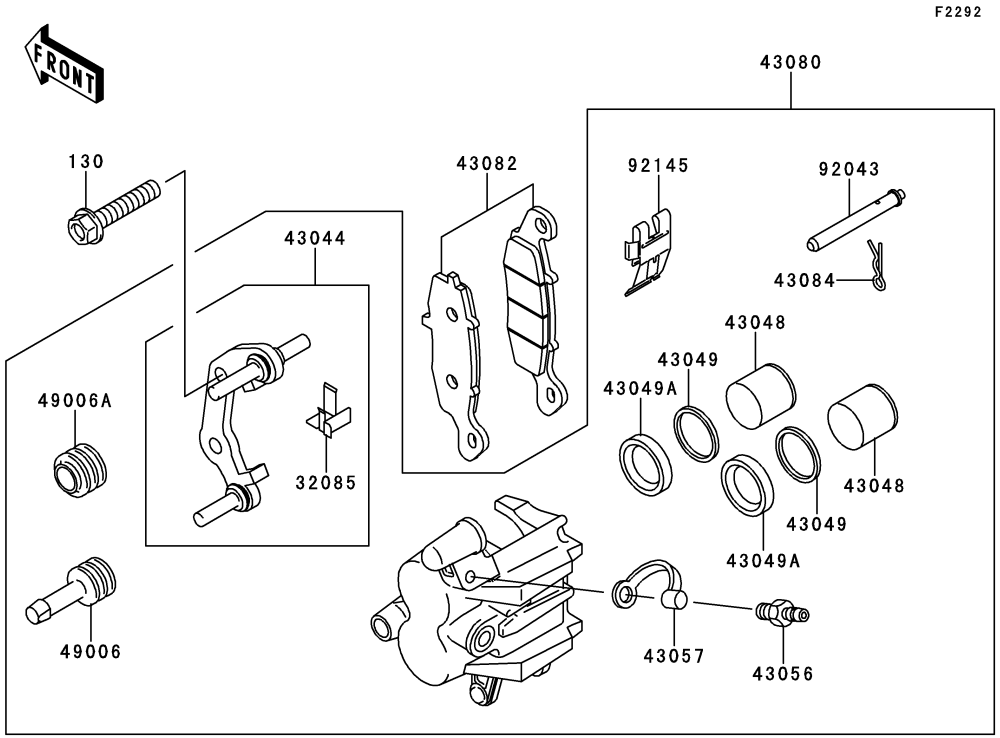

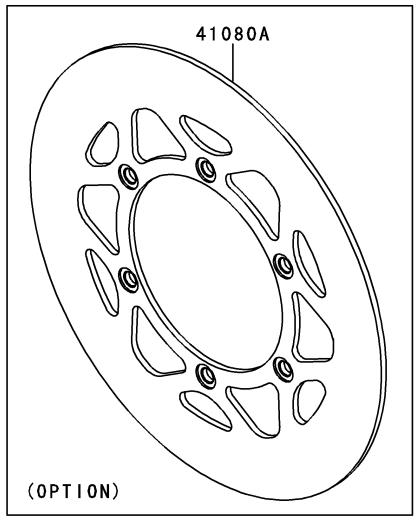

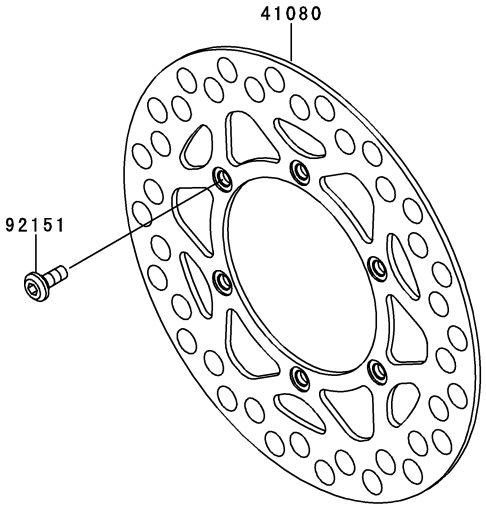

Ref. No.	Part No.	Description	Spec Code	Quantity-KX85 '12 ACF	'12 BCF			
32085	32085-1437	STOPPER		1	1			
41080	41080-0111	DISC,FR		1	1			
41080A	41080-0112 (OPTION)	DISC,FR		1	1			
43044	43044-1119	HOLDER-COMP-CALIPER,FR		1	1			
43048	43048-1083	PISTON-CALIPER		2	2			
43049	43049-1059	PACKING,PISTON		2	2			
43049A	43049-1090	PACKING,PISTON SEAL		2	2			
43056	43056-0007	BREATHER-BRAKE		1	1			
43057	43057-003	CAP-BREATHER		1	1			
43080	43080-0008	CALIPER-SUB-ASSY,FR,LH		1	1			
43082	43082-1196	PAD-ASSY-BRAKE		1	1			
43084	43084-003	CLAMP,PAD		1	1			
49006	49006-1054	BOOT,CALIPER		1	1			
49006A	49006-1055	BOOT,CALIPER		1	1			
92043	92043-1356	PIN,PAD		1	1			
92145	92145-1260	SPRING,PAD		1	1			
92151	92151-1799	BOLT,DISC PLATE,6MM		6	6			
130	130CA0840	BOLT-FLANGED,8X40		2	2			

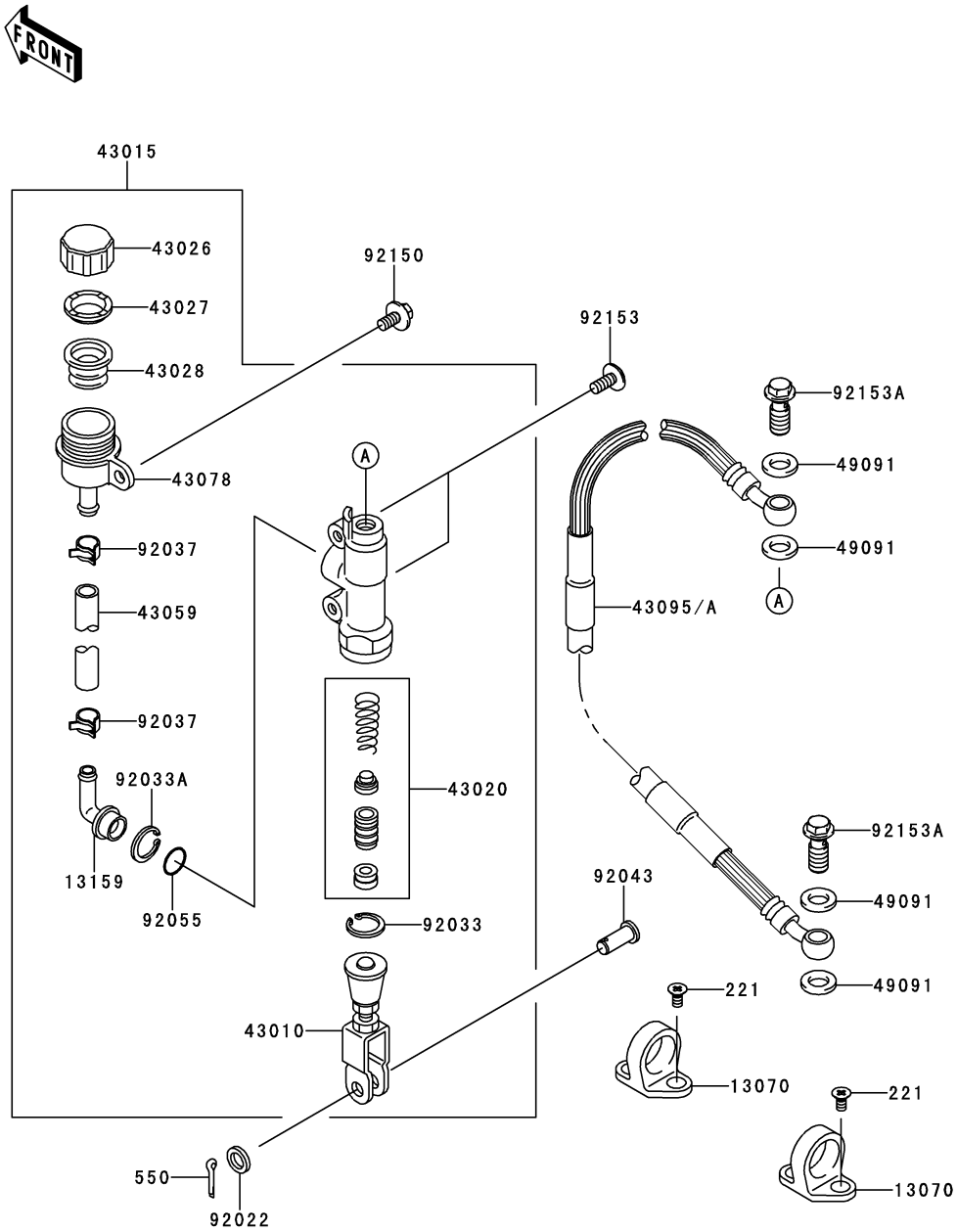

Ref. No.	Part No.	Description	Spec Code	Quantity-KX85 '12 ACF	'12 BCF			
13070	13070-1144	GUIDE,HOSE		2	2			
13159	13159-1056	CONNECTOR		1	1			
43010	43010-1079	ROD-ASSY-BRAKE		1	1			
43015	43015-1606	CYLINDER-ASSY-MASTER,RR		1	1			
43020	43020-1094	PISTON-COMP-BRAKE		1	1			
43026	43026-1058	CAP-BRAKE		1	1			
43027	43027-1052	PLATE-DIAPHRAGM		1	1			
43028	43028-1060	DIAPHRAGM		1	1			
43059	43059-1670	HOSE-BRAKE,RR MASTER CYLINDER		1	1			
43078	43078-1068	RESERVOIR		1	1			
43095	43095-0668	HOSE-BRAKE,RR			1			
43095A	43095-0670	HOSE-BRAKE,RR		1				
49091	49091-0001	WASHER-SEAL,10.1X14.5X1.5		4	4			
92022	92022-1028	WASHER,8.5X13X1		1	1			
92033	92033-0079	RING-SNAP,20.9X24.6X1.2		1	1			
92033A	92033-1186	RING-SNAP,20.5MM		1	1			
92037	92037-1710	CLAMP		2	2			
92043	92043-0004	PIN		1	1			
92055	92055-1251	RING-O,MASTER CYLINDER		1	1			
92150	92150-1340	BOLT,6X14		1	1			
92153	92153-1021	BOLT,SOCKET,6X14		2	2			
92153A	92153-1419	BOLT,OIL,L=23		2	2			
221	221AA0510	SCREW-CSK-CROSS,5X10		4	4			
550	550AA2015	PIN-COTTER,2.0X15		1	1			

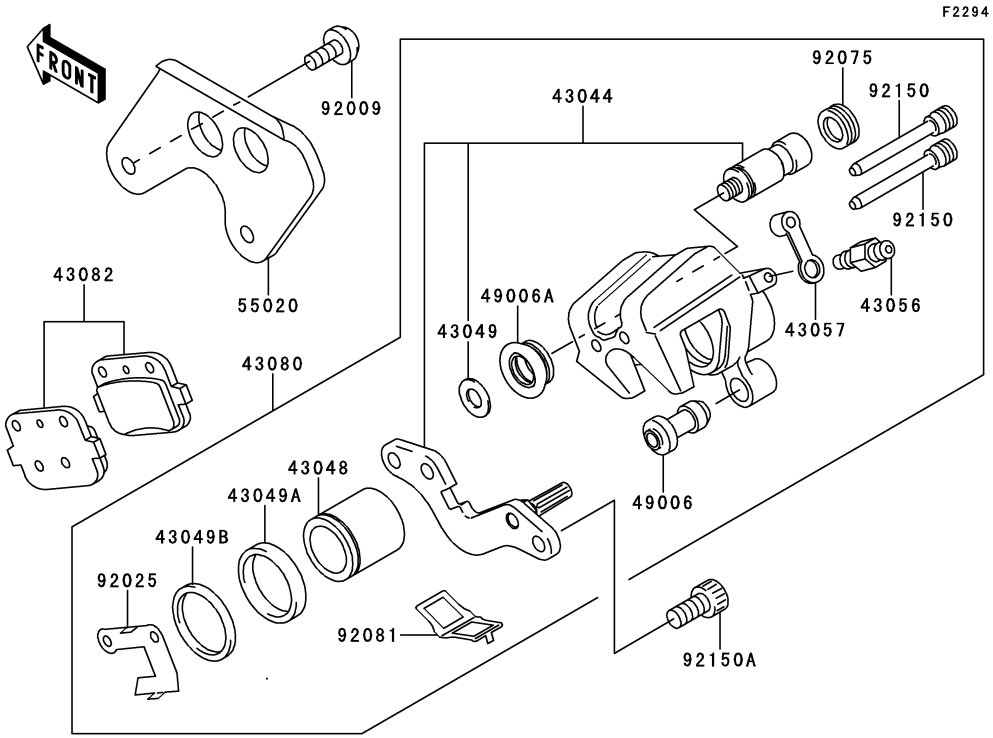

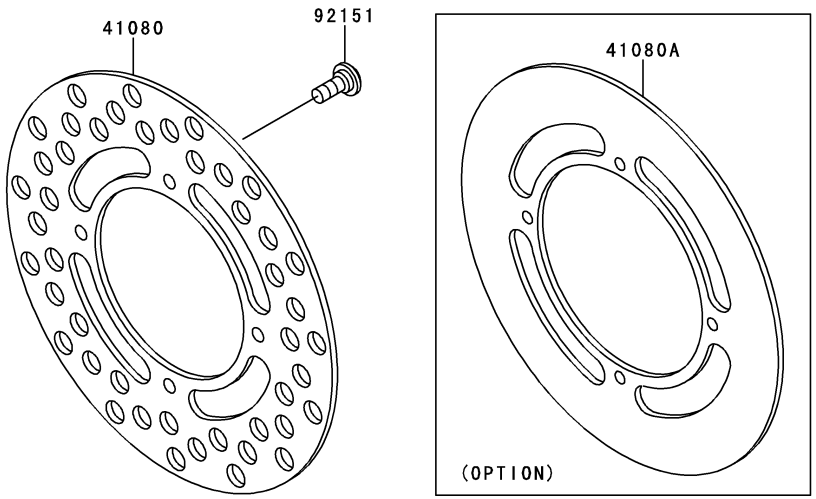

Ref. No.	Part No.	Description	Spec Code	Quantity-KX85 '12 ACF	'12 BCF			
41080	41080-1492	DISC,RR		1	1			
41080A	41080-1493 (OPTION)	DISC,RR		1	1			
43044	43044-1076	HOLDER-COMP-CALIPER,RR		1	1			
43048	43048-1064	PISTON-CALIPER		1	1			
43049	43049-1025	PACKING		1	1			
43049A	43049-1060	PACKING,PISTON SEAL		1	1			
43049B	43049-1061	PACKING,PISTON SEAL		1	1			
43056	43056-1055	BREATHER		1	1			
43057	43057-1001	CAP-BREATHER		1	1			
43080	43080-5134	CALIPER-SUB-ASSY,RR		1	1			
43082	43082-1205	PAD-ASSY-BRAKE		1	1			
49006	49006-1088	BOOT,CALIPER		1	1			
49006A	49006-1089	BOOT,CALIPER		1	1			
55020	55020-1247-6D	GUARD,CALIPER,BLACK		1	1			
92009	92009-1286	SCREW,6X10,WHITE		2	2			
92025	92025-1817	SHIM,PAD		1	1			
92075	92075-1414	DAMPER		1	1			
92081	92081-1502	SPRING,PAD		1	1			
92150	92150-1144	BOLT		2	2			
92150A	92150-1840	BOLT,SOCKET,8X16		2	2			
92151	92151-1799	BOLT,DISC PLATE,6MM		4	4			

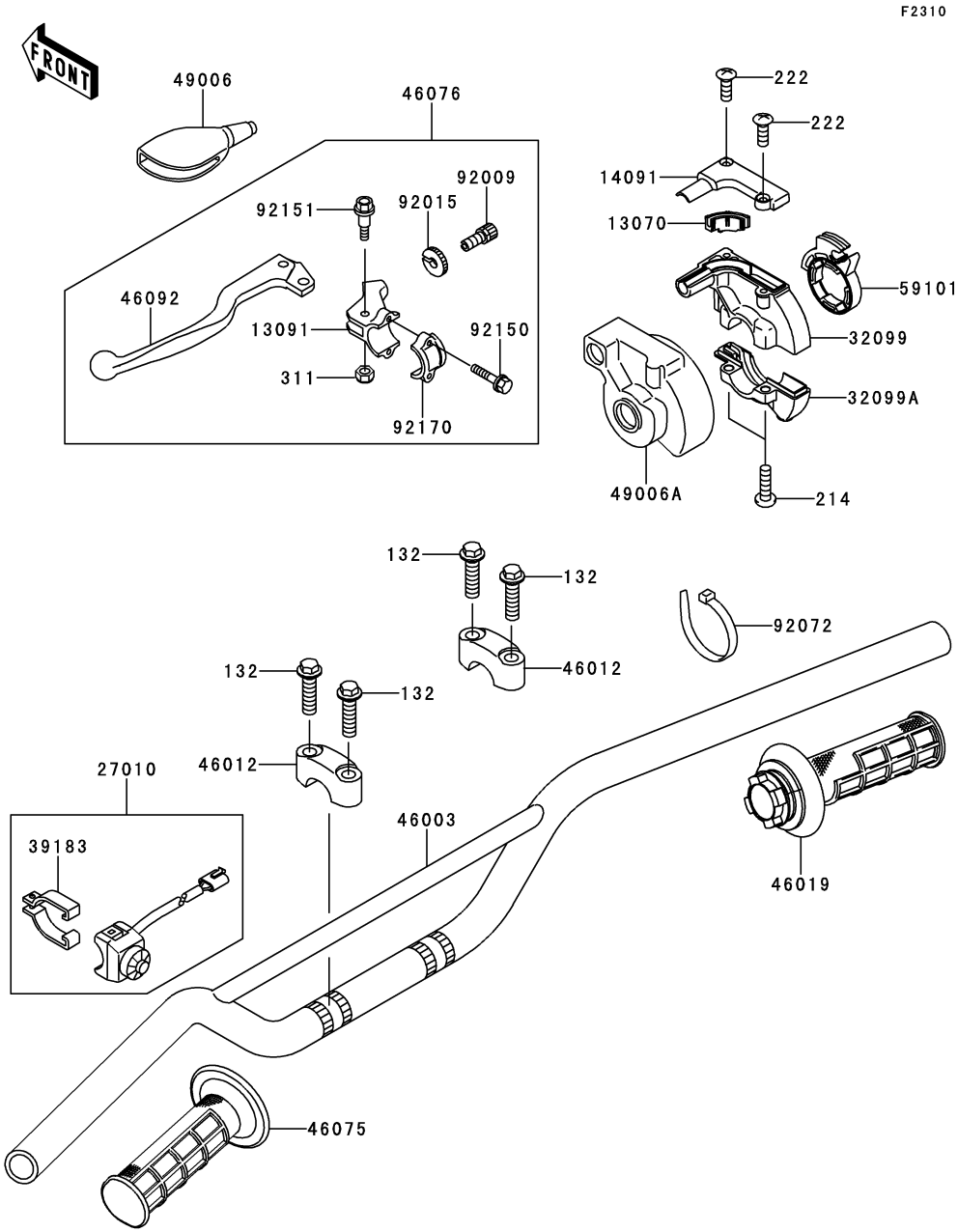

Ref. No.	Part No.	Description	Spec Code	Quantity-KX85 '12 ACF	'12 BCF			
13070	13070-0083	GUIDE,THROTTLE		1	1			
13091	13091-1728	HOLDER,CLUTCH LEVER		1	1			
14091	14091-0873	COVER,THROTTLE CASE		1	1			
27010	27010-0035	SWITCH,ENGINE STOP		1	1			
32099	32099-0037	CASE,THROTTLE,UPP		1	1			
32099A	32099-0038	CASE,THROTTLE,LWR		1	1			
39183	39183-1059	BAND-ASSY,ENGINE STOP SWITCH		1	1			
46003	46003-0027-18R	HANDLE,F.S.BLACK		1	1			
46012	46012-0011-21	HOLDER-HANDLE,UPP,F.BLACK		2	2			
46019	46019-0023	GRIP-ASSY,THROTTLE		1	1			
46075	46075-0072	GRIP,LH		1	1			
46076	46076-1203	LEVER-ASSY-GRIP,CLUTCH		1	1			
46092	46092-1165	LEVER-GRIP,CLUTCH		1	1			
49006	49006-1017	BOOT,LEVER HOLDER		1	1			
49006A	49006-1097	BOOT,THROTTLE CASE		1	1			
59101	59101-0003	REEL,THROTTLE		1	1			
92009	92009-1476	SCREW,CABLE ADJUST,8MM		1	1			
92015	92015-1596	NUT,CABLE ADJUST LOCK,8MM		1	1			
92072	92072-0055	BAND,L=100		1	1			
92150	92150-1474	BOLT		2	2			
92151	92151-1103	BOLT,LEVER SET,5MM		1	1			
92170	92170-1226	CLAMP,LEVER HOLDER		1	1			
132	132BC0830	BOLT-FLANGED-SMALL,8X30		4	4			
214	214AB0518	SCREW-PAN+-,5X18		2	2			
222	222AB0412	SCREW-CSK-RD-CROS,4X12		2	2			
311	311AA0500	NUT-HEX		1	1			

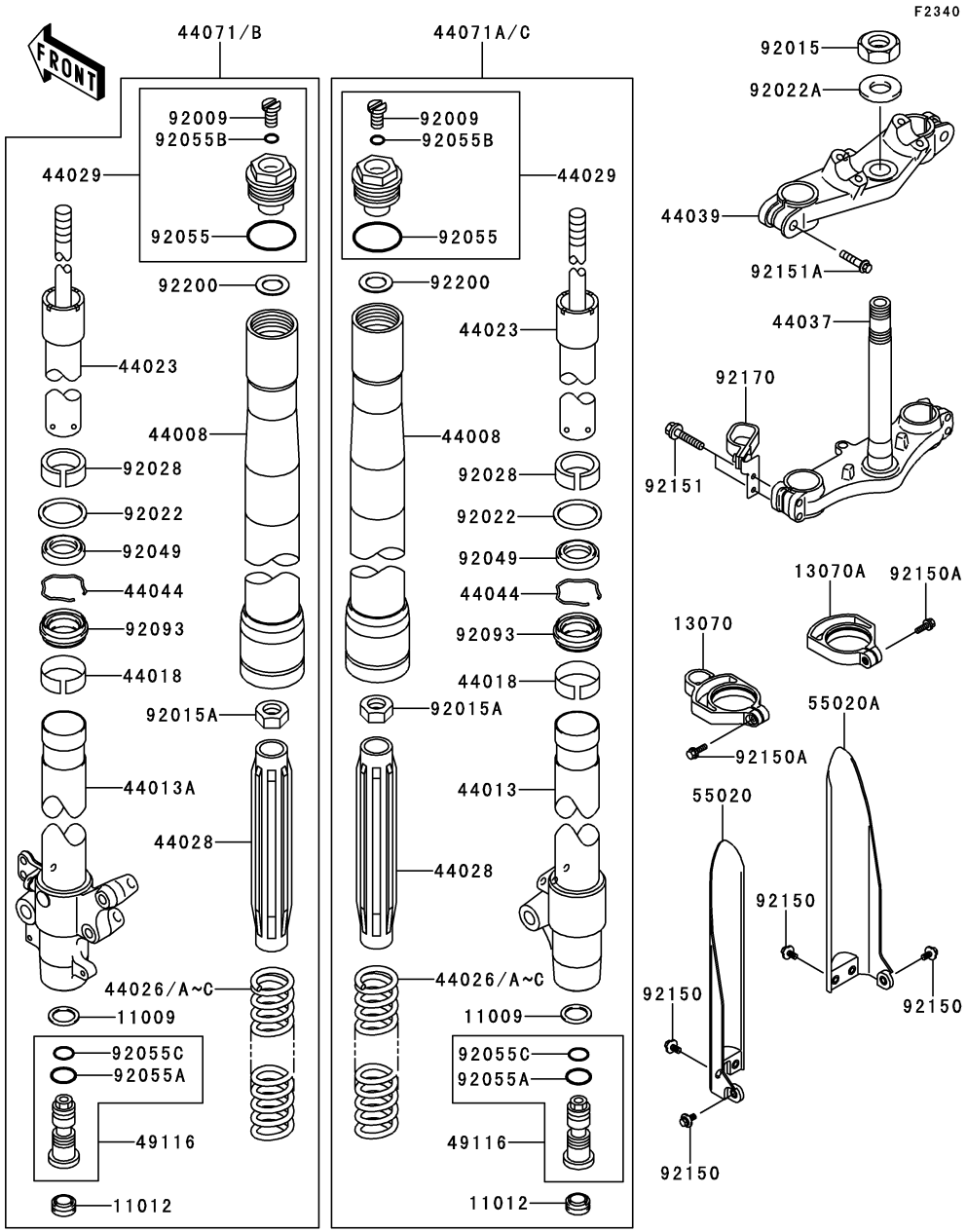

Ref. No.	Part No.	Description	Spec Code	Quantity-KX85 '12 ACF	Quantity-KX85 '12 BCF			
11009	11009-1592	GASKET,FORK CYLINDER BOLT		2	2			
11012	11012-1692	CAP		2	2			
13070	13070-0049-6D	GUIDE,PROTECTOR,LH,BLACK		1	1			
13070A	13070-0050-6D	GUIDE,PROTECTOR,RH,BLACK		1	1			
44008	44008-1041-828	PIPE-FORK OUTER,GOLD		2	2			
44013	44013-1442	PIPE-FORK INNER,RH		1	1			
44013A	44013-1484	PIPE-FORK INNER,LH		1	1			
44018	44018-1058	PISTON-FORK		2	2			
44023	44023-1119	CYLINDER-SET-FORK		2	2			
44026	44026-1633 (OPTION)	SPRING-FRONT FORK,K=2.75N/MM		2	2			
44026A	44026-1634	SPRING-FRONT FORK,K=2.84N/MM		2	2			
44026B	44026-1635 (OPTION)	SPRING-FRONT FORK,K=2.94N/MM		2	2			
44026C	44026-1671 (OPTION)	SPRING-FRONT FORK,K=2.65N/MM		2	2			
44028	44028-1090	GUIDE-FORK SPRING		2	2			
44029	44029-0056-KW	SEAT-FORK SPRING,BLUE		2	2			
44037	44037-0032-21	HOLDER-FORK UNDER,F.BLACK		1	1			
44039	44039-0023-21	HOLDER-FORK UPPER,F.BLACK		1	1			
44044	44044-015	RING-SNAP		2	2			
44071	44071-5129	DAMPER-ASSY,FORK,LH		1				
44071A	44071-5130	DAMPER-ASSY,FORK,RH		1				
44071B	44071-5131	DAMPER-ASSY,FORK,LH			1			
44071C	44071-5132	DAMPER-ASSY,FORK,RH			1			
49116	49116-1153	VALVE-ASSY,FORK		2	2			
55020	55020-1611-6D	GUARD,FORK,LH,BLACK		1	1			
55020A	55020-1612-6D	GUARD,FORK,RH,BLACK		1	1			
92009	92009-1568	SCREW		2	2			
92015	92015-1653	NUT,STEERING STEM,22MM		1	1			
92015A	92015-1839	NUT		2	2			
92022	92022-1275	WASHER,FRONT FORK		2	2			
92022A	92022-1873	WASHER,STEERING STEM		1	1			
92028	92028-1656	BUSHING		2	2			
92049	92049-1394	SEAL-OIL,FORK OUTER TUBE		2	2			
92055	92055-1123	RING-O		2	2			
92055A	92055-1156	RING-O		2	2			
92055B	92055-1441	RING-O,2.8X6.6X1.9		2	2			
92055C	92055-1502	RING-O,FORK VALVE		2	2			
92093	92093-1426	SEAL,FORK OUTER TUBE		2	2			

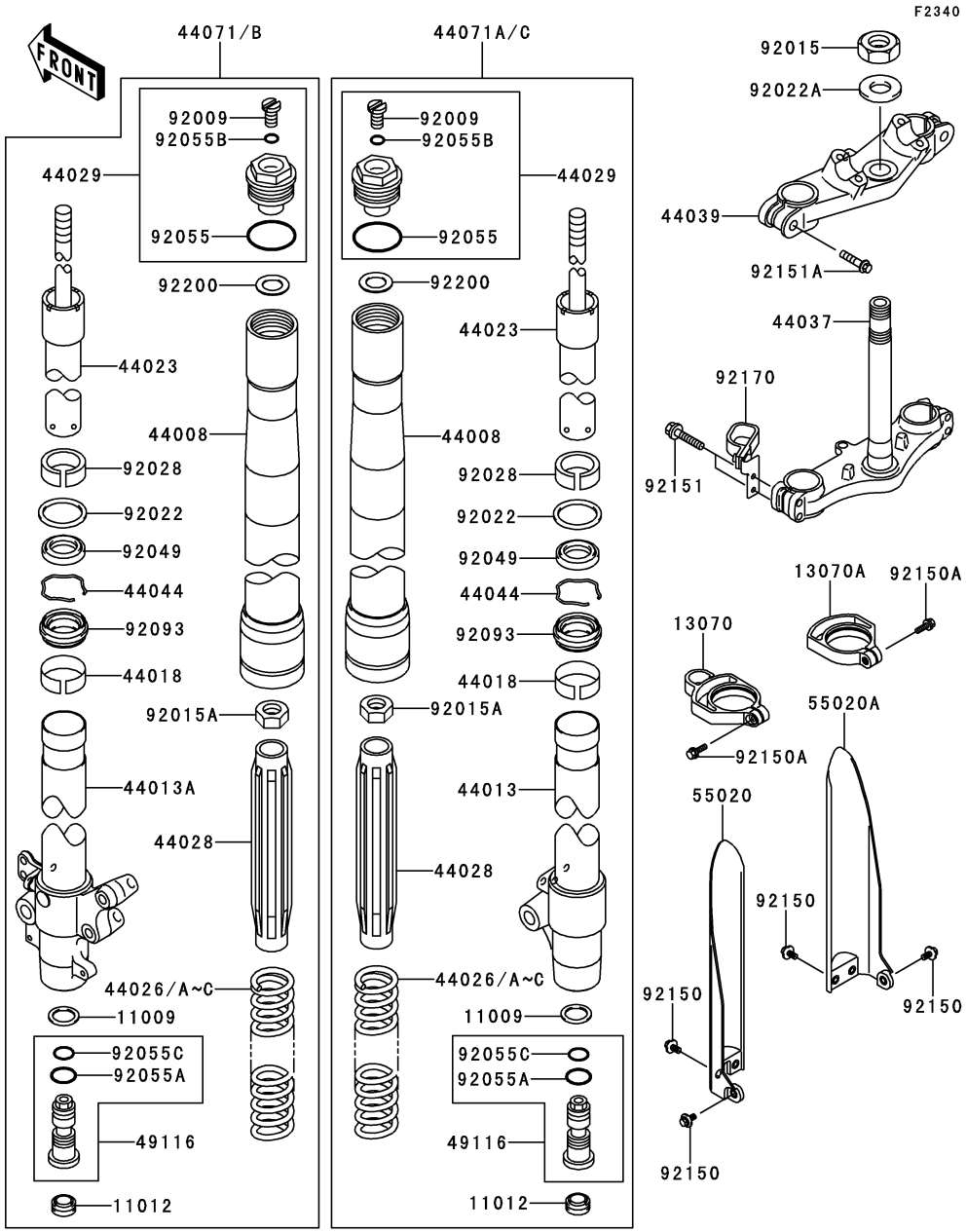

Ref. No.	Part No.	Description	Spec Code	Quantity-KX85 '12 ACF	'12 BCF			
92150	92150-1340	BOLT,6X14		6	6			
92150A	92150-1802	BOLT,5X16		2	2			
92151	92151-1877	BOLT,FLANGED,8X40		4	4			
92151A	92151-1878	BOLT,FLANGED,8X35		2	2			
92170	92170-1810	CLAMP		1	1			
92200	92200-1655	WASHER		2	2			

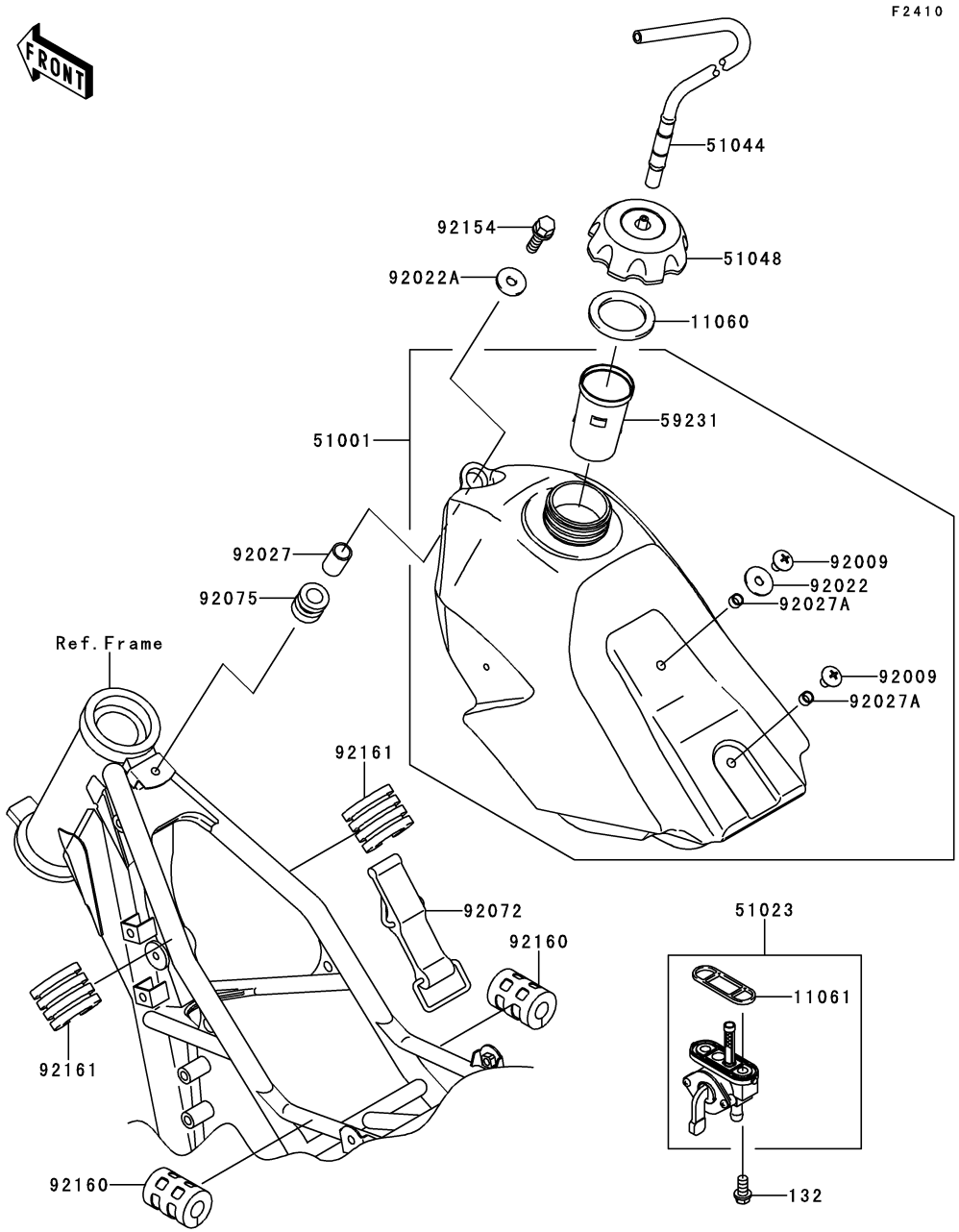

Ref. No.	Part No.	Description	Spec Code	Quantity-KX85 '12 ACF	'12 BCF			
11060	11060-1340	GASKET,FUEL TANK CAP		1	1			
11061	11061-0181	GASKET,FUEL TAP		1	1			
51001	51001-1677-6Z	TANK-COMP-FUEL,F.BLACK		1	1			
51023	51023-0024	TAP-ASSY,FUEL		1	1			
51044	51044-0025	TUBE-ASSY		1	1			
51048	51048-0014	CAP-ASSY-TANK,FUEL		1	1			
59231	59231-1096	FILLER		1	1			
92009	92009-1530	SCREW,6X10		2	2			
92022	92022-165	WASHER,PLAIN,6MM		1	1			
92022A	92022-1690	WASHER,6.5X24X2		1	1			
92027	92027-1966	COLLAR,6.8X10X14		1	1			
92027A	92027-2096	COLLAR,6.2X7.8X5		2	2			
92072	92072-1229	BAND,FUEL TANK		1	1			
92075	92075-1787	DAMPER		1	1			
92154	92154-0520	BOLT,FLANGED,6X25		1	1			
92160	92160-1236	DAMPER,FUEL TANK		2	2			
92161	92161-1175	DAMPER,FUEL TANK		2	2			
132	132BA0612	BOLT-FLANGED-SMALL,6X12		2	2			

F2510

Ref. No.	Part No.	Description	Spec Code	Quantity-KX85				
				’12	’12			
				ACF	BCF			
53066	53066-0093-336	SEAT-ASSY,GREEN/BLACK		1	1			

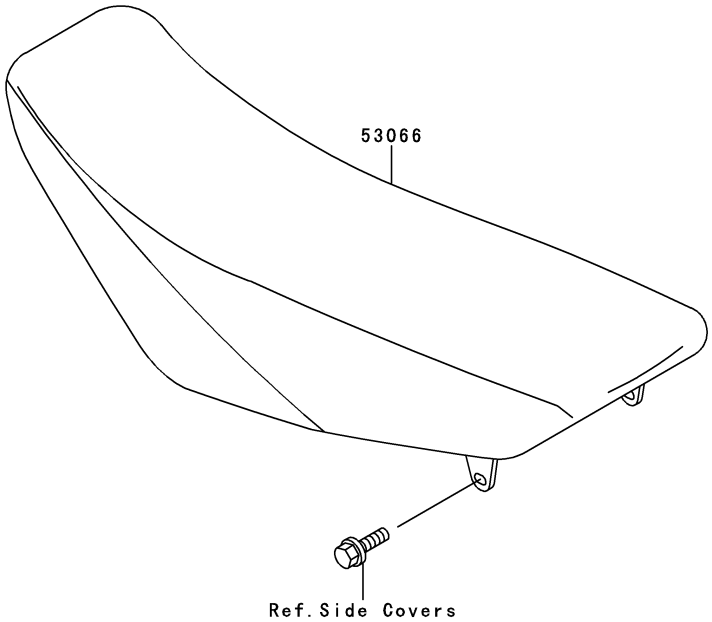

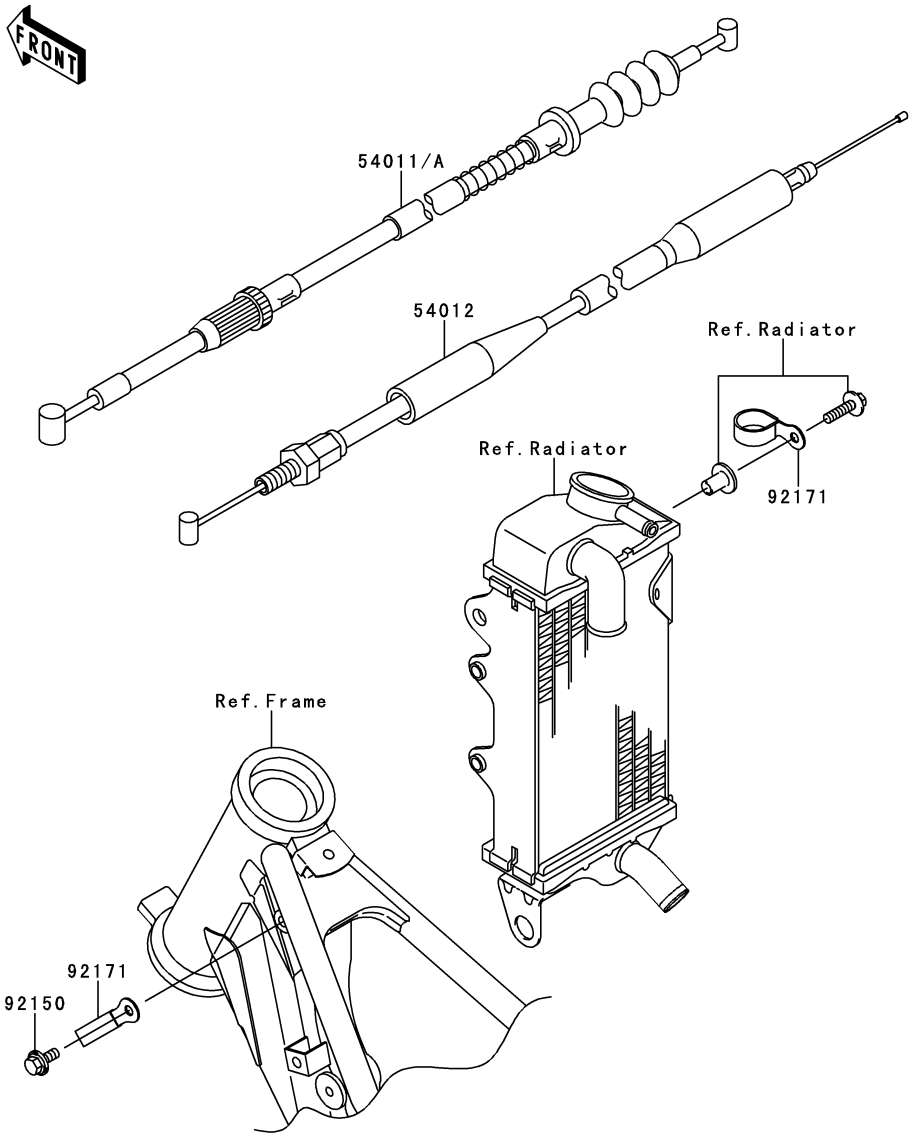

F2540

Ref. No.	Part No.	Description	Spec Code	Quantity-KX85 ’12 ACF	’12 BCF			
54011	54011-0052	CABLE-CLUTCH			1			
54011A	54011-1375	CABLE-CLUTCH		1				
54012	54012-0096	CABLE-THROTTLE		1	1			
92150	92150-1340	BOLT,6X14		1	1			
92171	92171-1279	CLAMP		2	2			

F2611

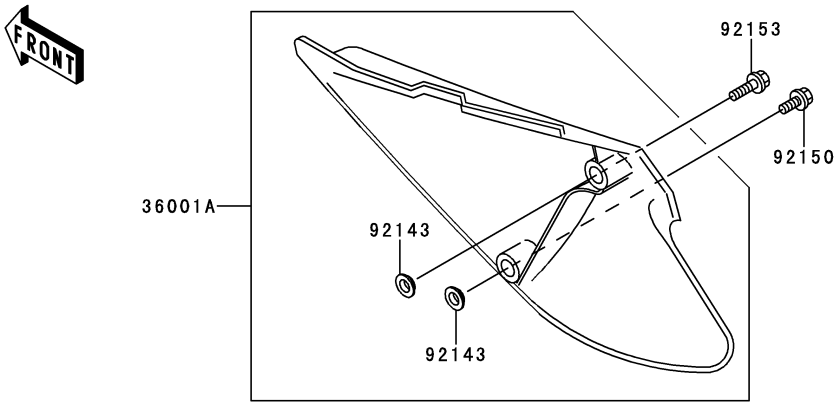

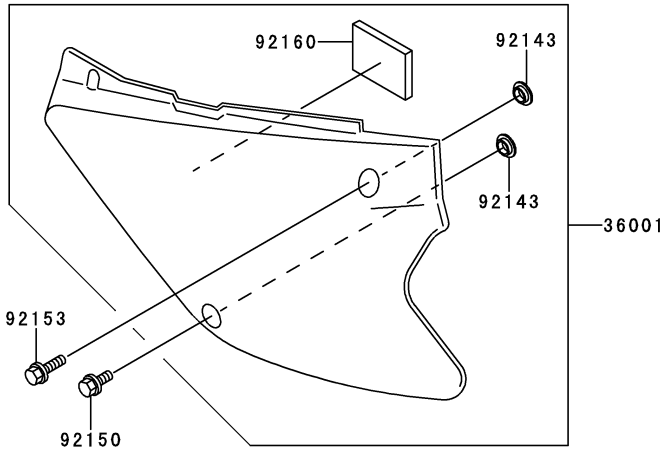

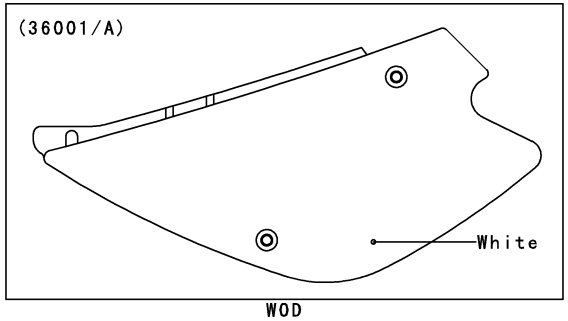

Ref. No.	Part No.	Description	Spec Code	Quantity-KX85 '12 ACF	'12 BCF			
36001	36001-1584-266	COVER-SIDE,LH,S.WHITE		1	1			
36001A	36001-1585-266	COVER-SIDE,RH,S.WHITE		1	1			
92143	92143-1196	COLLAR		4	4			
92150	92150-1340	BOLT,6X14		2	2			
92153	92153-0502	BOLT,6X20		2	2			
92160	92160-1899	DAMPER		1	1			

GRID NO. **F-3**

This grid covers:
Owner’s Tools

F2810

Ref. No.	Part No.	Description	Spec Code	Quantity-KX85				
				’12	’12			
				ACF	BCF			
92104	92104-002	GASKET-LIQUID,TB1105B,SILVER		1	1			
92110	92110-1119	TOOL-WRENCH,BOX,21MM&SPOKE		1	1			

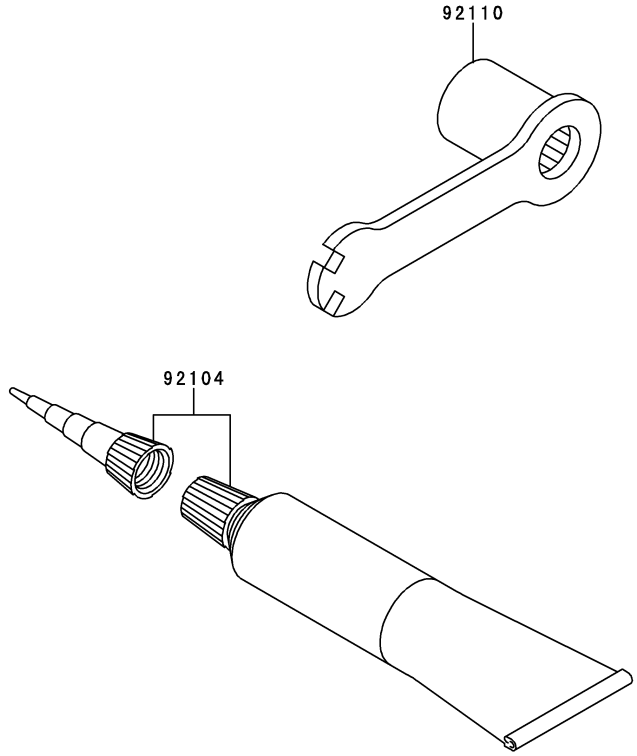

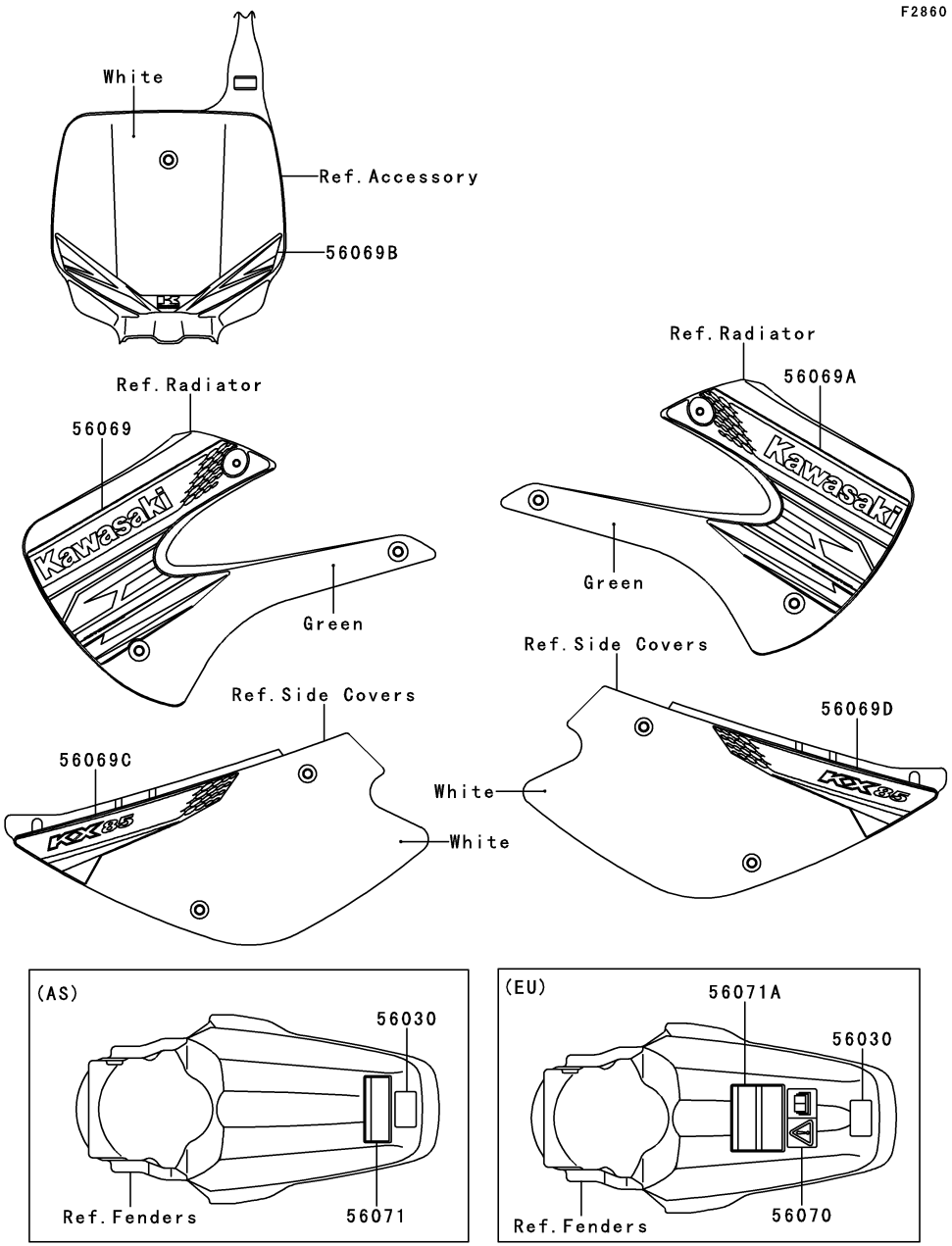

Ref. No.	Part No.	Description	Spec Code	Quantity-KX85 ’12 ACF	’12 BCF			
56030	56030-1230	LABEL,32:1		1	1			
56069	56069-1534	PATTERN,SHROUD,LH		1	1			
56069A	56069-1535	PATTERN,SHROUD,RH		1	1			
56069B	56069-1538	PATTERN,NUMBER PLATE		1	1			
56069C	56069-1539	PATTERN,SIDE COVER,LH		1	1			
56069D	56069-1540	PATTERN,SIDE COVER,RH		1	1			
56070	56070-3799	LABEL-WARNING,OWNER’S MANUAL						
	L- -		EU	1	1			
56071	56071-0028	LABEL-WARNING,IMPORTANT NOTICE						
	L- -		AS	1	1			
56071A	56071-0029	LABEL-WARNING,IMPORTANT NOTICE						
	L- -		EU	1	1			

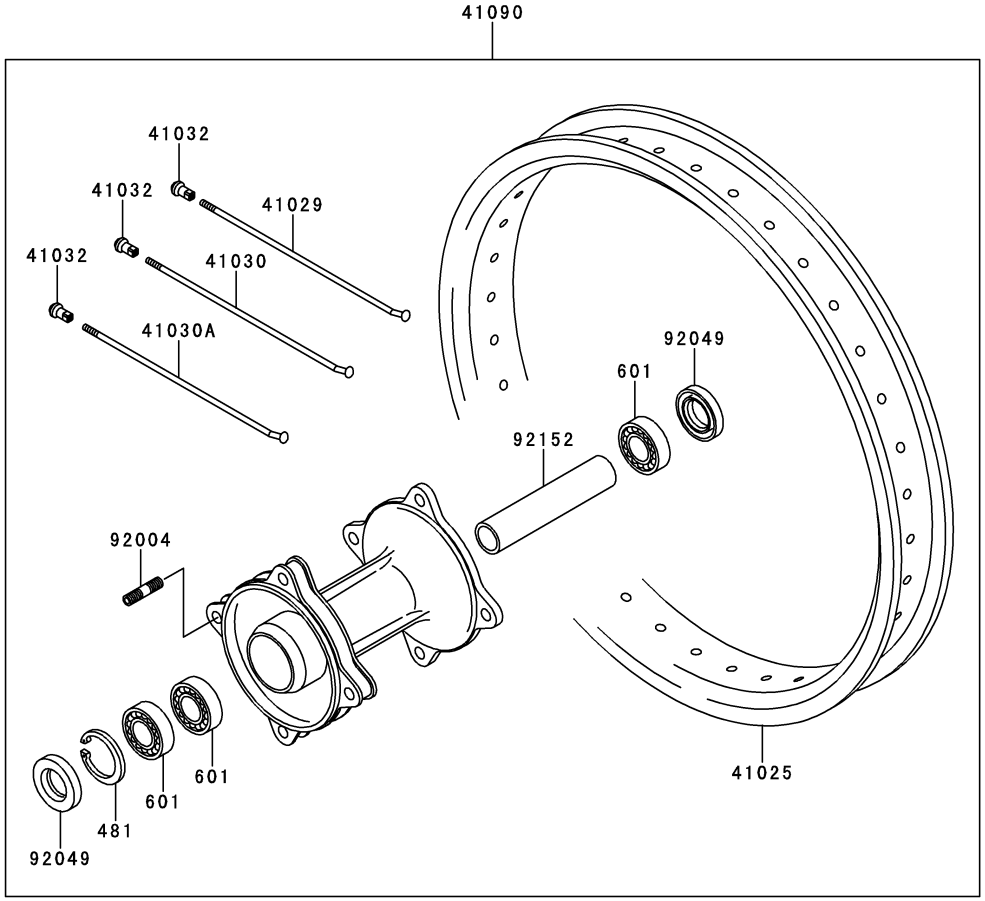

Ref. No.	Part No.	Description	Spec Code	Quantity-KX85 '12 ACF	'12 BCF			
41025	41025-0001 (OPTION)	RIM,RR,1.60X15		1				
41029	41029-0001 (OPTION)	SPOKE-INNER,RR,L&R,167MMX171D		14				
41030	41030-0001 (OPTION)	SPOKE-OUTER,RR,LH,165MMX171D		7				
41030A	41030-0002 (OPTION)	SPOKE-OUTER,RR,RH,163MMX171D		7				
41032	41032-1077 (OPTION)	NIPPLE-SPOKE,8X9X20(+),STEEL		28				
41090	41090-0001 (OPTION)	WHEEL-SUB ASSY,RR		1				
92004	92004-1183 (OPTION)	STUD,8X16		4				
92049	92049-1469 (OPTION)	SEAL-OIL		2				
92152	92152-1090 (OPTION)	COLLAR,RR BRAKE DRUM,L=95		1				
481	481J3500 (OPTION)	CIRCLIP-TYPE-C,35MM		1				
601	601B6202UU (OPTION)	BEARING-BALL		3				

F2910

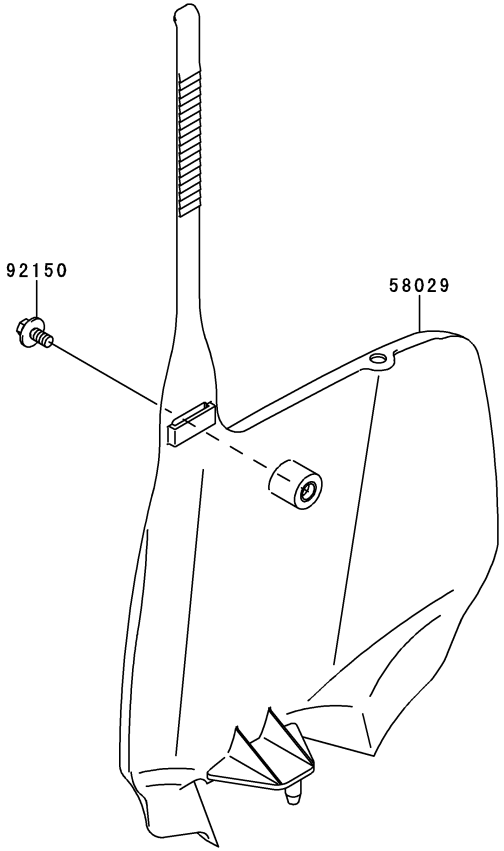

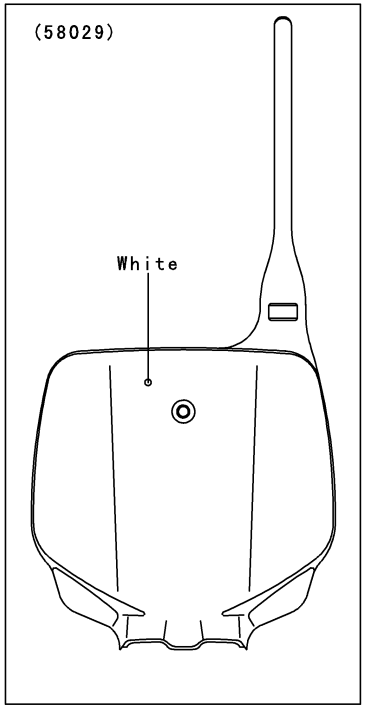

WOD

Ref. No.	Part No.	Description	Spec Code	Quantity-KX85 '12 ACF	'12 BCF			
58029	58029-1082-266	PLATE-NUMBER,S.WHITE		1	1			
92150	92150-1340	BOLT,6X14		1	1			

F2920

Ref. No.	Part No.	Description	Spec Code	Quantity-KX85 ’12 ACF	’12 BCF			
99976	99976-1663	OWNER’S MANUAL,EN/FR/DE						
	L- -		EU	1	1			
99976A	99976-1664	OWNER’S MANUAL,IT/ES/NL						
	L- -		EU	1	1			

Owner's Manual
(Local Procurement)

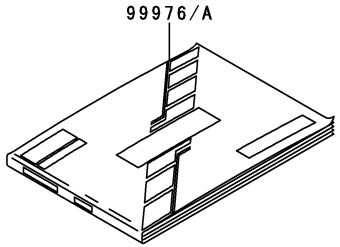

Ref.No.	Language
(99976)	English
	French
	German
(99976A)	Italian
	Spanish
	Dutch

Part No.	Grid No.
11001-1539	B-3
11004-1360	B-3
11005-0052	B-3
11009-1592	E-9
11009-1759	C-3
11011-1612	B-4
11012-1263	D-5
11012-1391	E-3
11012-1692	E-9
11013-1271	B-4
11060-1340	E-11
11060-1778	B-3
11060-1779	B-3
11060-1795	B-13
11060-1842	B-5
11061-0122	B-13
11061-0181	E-11
11061-0184	B-13
11061-0194	B-13
115BA0825	B-10
12021-1123	B-3
12022-1084	B-3
12053-1203	D-5
12053-1204	D-5
12053-1414	D-5
13001-0006	B-6
13002-1079	B-6
13008-1200	B-6
13031-0040	B-6
13032-1230	B-6
13033-1060	B-6
13034-0013	B-6
13035-1054	B-6
13037-0050	B-6
13037-0051	B-6
13061-1712	B-7
13064-1188	B-7
13066-1097	B-7
13070-0049-6D	E-9
13070-0050-6D	E-9
13070-0083	E-8
13070-1144	E-6
13070-1233	E-3
13070-1309	B-13
13070-1314	B-7
13078-1004	B-7
13087-1170	B-8
13088-1016	B-8
13089-1120	B-8
13091-1390	B-10
13091-1696	B-4
13091-1697	B-4
13091-1728	E-8
13095-1406	B-8
13097-1148	B-6
130CA0510	B-14
130CA0840	E-5
13127-1261	B-9
13128-0022	B-9
13129-1725	B-9
13129-1730	B-9
13140-1302	B-10
13140-1303	B-10
13140-1304	B-10
13141-1120	B-10
13144-1022	B-9
13144-1022	B-9
13144-1023	B-9
13144-1023	B-9
13159-1056	E-6
13161-1126	B-11
13165-1114	B-11
13168-1499	B-3
13169-012	B-12
13183-1182	B-12
13187-1013	B-8
13206-1066	B-7
13234-0008	B-13
13234-1103	B-13
13234-1105	B-3
13236-0023	B-13
13236-1152	B-11
13236-1298	B-8
13236-1346	E-4
13236-1353	D-14
13242-1286	B-11
13260-1014	B-9
13260-1950	B-9
13260-1951	B-9
13262-0180	B-9
13262-0181	B-9
13262-0298	B-9
13262-0299	B-9
13262-0300	B-9
13270-1829	D-5
13270-1899	D-5
13270-1905	B-4
132BA0612	B-12
132BA0612	C-7
132BA0612	E-11
132BA0616	B-11
132BA0616	B-7
132BC0618	C-6
132BC0620	B-14
132BC0620	B-3
132BC0630	B-14
132BC0830	E-8
13320-0002	B-13
14001-0118	B-12
14031-0108	B-13
14032-0041	B-13
14032-0134	B-13
14037-1249-6D	C-7
14037-1282-6D	C-7
14069-1062	B-12
14073-1785	B-4
14090-1811	B-3
14090-1812	B-3
14090-1860-6D	E-4
14091-0873	E-8
15003-1617	C-3
16002-1056	C-3
16004-1065	C-3
16007-1155	C-3
16014-1058	C-3
16016-1075	C-3
16017-1431	C-3
16021-1161	C-3
16025-1220	C-3
16030-1064	C-3
16031-1065	C-3
16049-1051	C-3
16065-1372	B-3
16115-018	B-13
16142-1144	B-13
16187-1176	C-3
16187-1177	C-3
16187-1178	C-3
16187-1179	C-3
16187-1180	C-3
16187-1182	C-3
16187-1183	C-3
16187-1184	C-3
16187-1185	C-3
16187-1186	C-3
18020-1272	B-5
18046-1559	B-5
18100-0016	B-5
18120-1114	B-5
21003-0104	C-5
21007-0073	C-5
21119-0048	C-5
21121-0022	C-6
21130-1077	C-6
214AB0518	E-8
221AA0510	E-6
221AA0616	B-3
221AA0618	B-7
221AA0620	B-3
221AA0645	D-5
222AB0412	E-8
223AB0414	C-4
223AB0416	C-4
224AA0614	C-5
27010-0035	E-8
290CA0808	B-7
311AA0500	E-8
32037-1552	D-4
32037-1553	D-4
32085-1437	E-5
32099-0037	E-8
32099-0038	E-8
32160-1486-18R	D-3
32160-1667-18R	D-3
32160-1673-18R	D-3
32190-1119	D-4
33001-1542-458	D-5
33001-1543-458	D-5
33032-1161	D-5
33040-1173	D-5
34024-1404-458	D-9
34028-1498-CE	D-7
34028-1499-CE	D-7
35004-0028-290	D-8
35011-1845	C-7
35019-0080	D-8
35022-1353-290	D-8
35063-1137	C-7
36001-1584-266	E-14
36001-1585-266	E-14
39007-1261	D-6
39007-1262	D-6
39061-1245	C-7
39062-1425	C-7
39062-1711	C-7
39062-1712	C-7
39129-1022	B-13
39183-1059	E-8
41009-0051	D-10
41009-0052	D-10
41009-0113	D-10
41009-0114	D-10
41009-0115	D-10
41009-0116	D-10
41022-1121	D-10
41022-1122	D-10
41022-1124	D-10
41022-1125	D-10
41022-1203	D-10
41022-1204	D-10
41023-1068	D-10
41023-1072	D-10
41023-1074	D-10
41023-1082	D-10
41023-1122	D-10
41023-1123	D-10
41024-010	D-10
41024-011	D-10
41025-0001	F-5
41025-0131-WC	D-10
41025-0132-WC	D-10
41025-0133-WC	D-10
41025-0134-WC	D-10
41029-0001	F-5
41029-1274	D-10
41029-1278	D-10
41029-1288	D-10
41029-1289	D-10
41029-1290	D-10
41029-1291	D-10
41030-0001	F-5
41030-0002	F-5
41030-1150	D-11
41030-1151	D-11
41030-1160	D-11
41030-1161	D-11
41032-1077	D-11
41032-1077	F-5
41034-1310	D-12
41034-1323	D-13
41068-1333	D-12
41068-1401	D-13
41080-0111	E-5
41080-0112	E-5
41080-1492	E-7
41080-1493	E-7
41090-0001	F-5
41090-0101-WC	D-11
41090-0102-WC	D-11
41090-0103-WC	D-11
41090-0104-WC	D-11
410AA0800	D-13
410AA1400	D-13
42036-1067	D-5
42036-1248	D-6
42036-1273	D-6
42036-1274	D-6
42036-1351	D-6
42041-1207	D-13
42041-1227	D-13
42041-1228	D-13
42041-1228	D-13
42041-1229	D-13
42041-1229	D-13
42041-1245	D-13
42041-1246	D-13
43010-1079	E-6
43015-0145	E-4
43015-1606	E-6
43020-1094	E-6
43020-1123	E-4
43022-1010	E-4
43026-0020	E-4
43026-1058	E-6
43027-1052	E-6
43028-1060	E-6
43028-1067	E-4
43034-1110	E-4
43044-1076	E-7
43044-1119	E-5
43044-1122	D-13
43048-1064	E-7
43048-1083	E-5
43049-1025	E-7
43049-1059	E-5
43049-1060	E-7
43049-1061	E-7
43049-1090	E-5
43056-0007	E-5
43056-1055	E-7
43057-003	E-5
43057-1001	E-7
43059-1670	E-6
43078-1068	E-6
43078-1112	E-3
43080-0008	E-5
43080-5134	E-7
43082-1196	E-5
43082-1205	E-7
43084-003	E-5

Part No.	Grid No.
43089-0008-829	E-3
43095-0668	E-6
43095-0670	E-6
43095-1091	E-4
44008-1041-828	E-9
44013-1442	E-9
44013-1484	E-9
44018-1058	E-9
44023-1119	E-9
44026-1633	E-9
44026-1634	E-9
44026-1635	E-9
44026-1671	E-9
44028-1090	E-9
44029-0056-KW	E-9
44037-0032-21	E-9
44039-0023-21	E-9
44044-015	E-9
44071-5129	E-9
44071-5130	E-9
44071-5131	E-9
44071-5132	E-9
45014-5045	E-3
46003-0027-18R	E-8
46012-0011-21	E-8
46019-0023	E-8
46075-0072	E-8
46076-1203	E-8
46092-1165	E-8
46102-1291	D-6
46102-1409	B-8
46102-1411	E-3
480J1200	B-7
480J1500	B-7
480J1600	B-7
481J2400	B-14
481J3500	D-13
481J3500	F-5
481J3700	D-12
482J5000	B-3
49006-0078	E-4
49006-1017	E-8
49006-1054	E-5
49006-1055	E-5
49006-1088	E-7
49006-1089	E-7
49006-1097	E-8
49006-1313	B-13
49016-1044	E-4
49047-1063	B-10
49047-1064	B-10
49085-1070	C-7
49085-1073	C-7
49089-1139-290	C-7
49089-1146-290	C-7
49091-0001	E-4
49091-0001	E-6
49110-0010	B-13
49111-1064	B-13
49114-0005	B-13
49116-1153	E-9
49116-1181	B-3
49123-1054	C-3
51001-1677-6Z	E-11
51023-0024	E-11
51044-0025	E-11
51048-0014	E-11
52005-0019	B-13
53066-0093-336	E-12
54011-0052	E-13
54011-1375	E-13
54012-0096	E-13
55020-1247-6D	E-7
55020-1611-6D	E-9
55020-1612-6D	E-9
550AA2015	E-6
550AA2518	D-4
550AA2520	D-12
550AA2520	D-13
550S3020	D-7
56030-1230	F-4
56069-1534	F-4
56069-1535	F-4
56069-1538	F-4
56069-1539	F-4
56069-1540	F-4
56070-3799	F-4
56071-0028	F-4
56071-0029	F-4
58029-1082-266	F-6
59051-1026	B-7
59051-1146	B-6
59051-1147	B-7
59051-1412	B-13
59101-0003	E-8
59231-1096	E-11
59256-1064	B-13
600A0800	B-7
600A1000	B-14
601A6001	B-8
601B6202UU	D-13
601B6202UU	F-5
601B6301UU	D-12
610A0408	B-10
610A0408	B-14
610A0408	B-3
670B2012	D-14
670E3034	B-5
92001-1006	D-4
92001-1179	D-5
92002-1222	B-3
92002-1237	B-11
92002-1659	B-12
92002-1955	E-3
92004-1183	D-13
92004-1183	F-5
92004-1252	B-12
92004-1253	B-3
92004-1254	B-12
92005-0050	B-3
92009-1014	B-3
92009-1286	E-7
92009-1458	E-4
92009-1476	E-8
92009-1530	E-11
92009-1563	B-12
92009-1568	E-9
92009-1607	B-7
92009-1828	D-5
92015-077	C-5
92015-1014	D-5
92015-1078	B-5
92015-1259	B-4
92015-1339	D-8
92015-1401	D-13
92015-1406	D-4
92015-1432	D-13
92015-1432	D-4
92015-1433	D-12
92015-1433	D-6
92015-1487	C-7
92015-1528	E-4
92015-1574	C-3
92015-1596	E-8
92015-1653	E-9
92015-1679	E-3
92015-1684	D-3
92015-1713	E-3
92015-1839	E-9
92022-077	B-13
92022-077	B-3
92022-1028	E-6
92022-107	D-4
92022-125	D-8
92022-1275	E-9
92022-1380	B-13
92022-1561	D-4
92022-165	E-11
92022-1690	E-11
92022-1814	E-4
92022-1829	D-7
92022-1873	E-9
92022-237	B-5
92022-304	B-3
92025-1780	B-8
92025-1817	E-7
92026-1136	B-6
92026-1602	B-9
92027-120	B-5
92027-1757	D-8
92027-1940	B-11
92027-1966	E-11
92027-2096	E-11
92028-1656	E-9
92028-1811	B-8
92033-0005	B-6
92033-0079	E-6
92033-028	B-9
92033-1079	B-9
92033-1091	E-3
92033-1186	E-6
92033-1211	E-3
92036-018	C-3
92037-1173	B-3
92037-1173	C-6
92037-1318	B-12
92037-1362	E-4
92037-1363	E-4
92037-1396	C-3
92037-147	C-3
92037-1486	B-4
92037-1589	C-7
92037-1710	E-6
92037-1712	C-3
92037-1843	B-3
92037-1969	C-3
92038-001	C-5
92042-007	B-12
92043-0004	E-6
92043-1207	C-3
92043-1264	B-12
92043-1356	E-5
92043-1470	B-3
92043-1643	D-7
92045-0010	B-13
92045-1058	B-10
92045-1059	B-12
92045-1062	D-12
92045-1118	B-12
92045-1226	B-12
92045-1304	B-12
92045-1305	B-13
92045-1360	B-12
92045-1450	B-12
92046-1046	D-5
92046-1144	D-6
92046-1160	B-13
92046-1192	D-6
92046-1217	B-13
92046-1254	B-8
92049-002	B-13
92049-0069	D-6
92049-1188	B-12
92049-1238	B-3
92049-1257	D-12
92049-1262	B-13
92049-1292	B-12
92049-1328	D-6
92049-1366	B-13
92049-1394	E-9
92049-1414	B-13
92049-1468	B-7
92049-1469	D-13
92049-1469	F-5
92051-005	B-12
92055-022	B-9
92055-1123	E-9
92055-1156	E-9
92055-1167	C-3
92055-1251	E-6
92055-1334	E-3
92055-1383	E-3
92055-1389	C-4
92055-1441	E-9
92055-1461	B-5
92055-1502	E-9
92055-1566	B-3
92057-1496	D-13
92057-1497	D-13
92058-1086	D-13
92059-1941	C-4
92063-1338	C-4
92063-1359	C-4
92063-1360	C-4
92063-1361	C-4
92063-1362	C-4
92063-1364	C-4
92064-1140	C-4
92064-1141	C-4
92064-1142	C-4
92064-1143	C-4
92064-1144	C-4
92065-058	B-12
92066-1437	B-12
92070-1228	C-6
92070-1241	C-6
92071-042	B-12
92072-0055	E-8
92072-056	C-7
92072-1229	E-11
92072-1293	D-4
92075-1352	C-7
92075-1414	E-7
92075-1598	B-5
92075-1787	E-11
92081-020	B-7
92081-076	B-11
92081-122	B-7
92081-1492	B-8
92081-1502	E-7
92081-1555	C-4
92081-1716	B-11
92083-012	B-11
92093-1200	B-5
92093-1426	E-9
92093-1436	D-6
92104-002	F-3
92110-1119	F-3
92116-1065	D-3
92122-1213	D-4
92143-1055	B-11
92143-1087	C-7
92143-1196	C-7
92143-1196	E-14
92143-1432	D-4
92143-1676	D-5
92143-1932	B-13
92143-1933	B-13
92143-1935	D-12
92143-1936	D-12

Part No.	Grid No.
92143-1938	D-13
92143-1995	B-11
92144-1178	C-4
92144-1566	C-4
92144-1570-17D	E-3
92144-1571-17D	E-3
92144-1752	D-14
92144-1782	C-4
92144-1945-17D	E-3
92145-0089	B-13
92145-1058	B-7
92145-1106	D-7
92145-1107	D-7
92145-1260	E-5
92145-1340	B-5
92145-1371-17D	E-3
92150-1144	E-7
92150-1221	D-3
92150-1340	C-7
92150-1340	E-10
92150-1340	E-13
92150-1340	E-14
92150-1340	E-6
92150-1340	F-6
92150-1359	D-4
92150-1412	D-6
92150-1435	C-7
92150-1451	E-4
92150-1452	E-4
92150-1467	B-11
92150-1474	E-8
92150-1482	D-4
92150-1487	D-4
92150-1506	C-5
92150-1506	D-8
92150-1673	B-7
92150-1711	D-6
92150-1715	B-8
92150-1801	D-8
92150-1802	E-10
92150-1840	E-7
92150-1888	B-3
92151-1103	E-8
92151-1133	B-5
92151-1135	B-12
92151-1180	B-13
92151-1234	D-5
92151-1256	B-4
92151-1413	D-6
92151-1423	B-4
92151-1572	D-14
92151-1799	E-5
92151-1799	E-7
92151-1822	B-5
92151-1877	E-10
92151-1878	E-10
92152-0085	B-13
92152-0195	B-9
92152-0666	C-7
92152-1090	D-13
92152-1090	F-5
92152-1139	D-6
92152-1255	D-8
92153-0502	D-8
92153-0502	E-14
92153-0627	E-4
92153-0695	E-4
92153-0860	B-4
92153-1005	B-13
92153-1005	B-3
92153-1006	B-3
92153-1007	B-5
92153-1008	B-5
92153-1008	C-7
92153-1012	D-4
92153-1021	E-6
92153-1419	E-6
92154-0520	B-13
92154-0520	C-7
92154-0520	E-11
92160-1176	B-5
92160-1236	E-11
92160-1899	E-14
92160-1913	B-5
92161-1175	E-11
92170-1194	B-4
92170-1226	E-8
92170-1810	E-10
92171-0652	C-5
92171-1279	E-13
92171-1323	C-4
92172-0087	B-13
92172-0119	D-5
92172-0401	E-4
92180-1060	D-4
92190-1116	B-12
92190-1488	D-14
92191-1211	C-7
92191-1243	C-4
92191-1591	C-4
92191-1610	C-4
92192-0265	B-3
92200-0040	B-14
92200-0213	B-6
92200-1209	B-7
92200-1351	B-8
92200-1352	B-8
92200-1655	E-10
92210-0076	B-12
92210-0076	B-3
92210-0215	B-6
92210-1080	D-3
92210-1113	B-8
92210-1249	D-5
99976-1663	F-7
99976-1664	F-7

Accessory....F-6
Air Cleaner....B-4
Brake Pedal....D-14
Cables....E-13
Carburetor....C-3/C-4
Clutch....B-8
Crankcase....B-12
Crankshaft....B-6
Cylinder....B-3
Cylinder Head....B-3
Engine Cover(s)....B-13/B-14
Engine Mount....D-4
Fenders....D-8
Footrests....D-7
Frame....D-3
Front Brake....E-5
Front Fork....E-10/E-9
Front Hub....D-12
Front Master Cylinder....E-4
Fuel Tank....E-11
Gear Change Drum....B-10
Gear Change Mechanism....B-11
Generator....C-5
Handlebar....E-8
Ignition System....C-6
Kickstarter Mechanism....B-7
Labels....F-4
Manual(EU)....F-7
Muffler(s)....B-5
Optional Parts(ACF)....F-5
Owner’s Tools....F-3
Piston(s)....B-6
Radiator....C-7
Rear Brake....E-7
Rear Hub....D-13
Rear Master Cylinder....E-6
Seat....E-12
Shift Fork(s)....B-10
Shock Absorber(s)....E-3
Side Covers....E-14
Stand(s)....D-9
Suspension....D-6
Swingarm....D-5
Tires....D-10/D-11
Transmission....B-9

Accessory....F-6
Air Cleaner....B-4
Brake Pedal....D-14
Cables....E-13
Carburetor....C-3/C-4
Clutch....B-8
Crankcase....B-12
Crankshaft....B-6
Cylinder....B-3
Cylinder Head....B-3
Engine Cover(s)....B-13/B-14
Engine Mount....D-4
Fenders....D-8
Footrests....D-7
Frame....D-3
Front Brake....E-5
Front Fork....E-10/E-9
Front Hub....D-12
Front Master Cylinder....E-4
Fuel Tank....E-11
Gear Change Drum....B-10
Gear Change Mechanism....B-11
Generator....C-5
Handlebar....E-8
Ignition System....C-6
Kickstarter Mechanism....B-7
Labels....F-4
Manual(EU)....F-7
Muffler(s)....B-5
Optional Parts(ACF)....F-5
Owner’s Tools....F-3
Piston(s)....B-6
Radiator....C-7
Rear Brake....E-7
Rear Hub....D-13
Rear Master Cylinder....E-6
Seat....E-12
Shift Fork(s)....B-10
Shock Absorber(s)....E-3
Side Covers....E-14
Stand(s)....D-9
Suspension....D-6
Swingarm....D-5
Tires....D-10/D-11
Transmission....B-9

Accessory....F-6
Air Cleaner....B-4
Brake Pedal....D-14
Cables....E-13
Carburetor....C-3/C-4
Clutch....B-8
Crankcase....B-12
Crankshaft....B-6
Cylinder....B-3
Cylinder Head....B-3
Engine Cover(s)....B-13/B-14
Engine Mount....D-4
Fenders....D-8
Footrests....D-7
Frame....D-3
Front Brake....E-5
Front Fork....E-10/E-9
Front Hub....D-12
Front Master Cylinder....E-4
Fuel Tank....E-11
Gear Change Drum....B-10
Gear Change Mechanism....B-11
Generator....C-5
Handlebar....E-8
Ignition System....C-6
Kickstarter Mechanism....B-7
Labels....F-4
Manual(EU)....F-7
Muffler(s)....B-5
Optional Parts(ACF)....F-5
Owner’s Tools....F-3
Piston(s)....B-6
Radiator....C-7
Rear Brake....E-7
Rear Hub....D-13
Rear Master Cylinder....E-6
Seat....E-12
Shift Fork(s)....B-10
Shock Absorber(s)....E-3
Side Covers....E-14
Stand(s)....D-9
Suspension....D-6
Swingarm....D-5
Tires....D-10/D-11
Transmission....B-9

Accessory....F-6
Air Cleaner....B-4
Brake Pedal....D-14
Cables....E-13
Carburetor....C-3/C-4
Clutch....B-8
Crankcase....B-12
Crankshaft....B-6
Cylinder....B-3
Cylinder Head....B-3
Engine Cover(s)....B-13/B-14
Engine Mount....D-4
Fenders....D-8
Footrests....D-7
Frame....D-3
Front Brake....E-5
Front Fork....E-10/E-9
Front Hub....D-12
Front Master Cylinder....E-4
Fuel Tank....E-11
Gear Change Drum....B-10
Gear Change Mechanism....B-11
Generator....C-5
Handlebar....E-8
Ignition System....C-6
Kickstarter Mechanism....B-7
Labels....F-4
Manual(EU)....F-7
Muffler(s)....B-5
Optional Parts(ACF)....F-5
Owner’s Tools....F-3
Piston(s)....B-6
Radiator....C-7
Rear Brake....E-7
Rear Hub....D-13
Rear Master Cylinder....E-6
Seat....E-12
Shift Fork(s)....B-10
Shock Absorber(s)....E-3
Side Covers....E-14
Stand(s)....D-9
Suspension....D-6
Swingarm....D-5
Tires....D-10/D-11
Transmission....B-9

Accessory....F-6
Air Cleaner....B-4
Brake Pedal....D-14
Cables....E-13
Carburetor....C-3/C-4
Clutch....B-8
Crankcase....B-12
Crankshaft....B-6
Cylinder....B-3
Cylinder Head....B-3
Engine Cover(s)....B-13/B-14
Engine Mount....D-4
Fenders....D-8
Footrests....D-7
Frame....D-3
Front Brake....E-5
Front Fork....E-10/E-9
Front Hub....D-12
Front Master Cylinder....E-4
Fuel Tank....E-11
Gear Change Drum....B-10
Gear Change Mechanism....B-11
Generator....C-5
Handlebar....E-8
Ignition System....C-6
Kickstarter Mechanism....B-7
Labels....F-4
Manual(EU)....F-7
Muffler(s)....B-5
Optional Parts(ACF)....F-5
Owner’s Tools....F-3
Piston(s)....B-6
Radiator....C-7
Rear Brake....E-7
Rear Hub....D-13
Rear Master Cylinder....E-6
Seat....E-12
Shift Fork(s)....B-10
Shock Absorber(s)....E-3
Side Covers....E-14
Stand(s)....D-9
Suspension....D-6
Swingarm....D-5
Tires....D-10/D-11
Transmission....B-9