Kawasaki

MICRO-K

PARTS CATALOG

Year & Model	**'13 KX450FDF**	**'14 KX450FEF**
Color	1. Lime Green (777)	1. Lime Green (777)
VIN No. Range	JKAKX450FFA012001 ~ 022000 JKAKXGFC√DA012001 ~ 022000 (Australia only)	JKAKX450FFA022001 ~ JKAKXGFC√EA022001 ~ (Australia only)
Engine No. Range	KX450FE000001 ~	KX450FE000001 ~

'13～'14 KX450 FDF/FEF

(KX450F)

Publications.....A-2
Model Identification..... A-4
Engine..... B-1
Chassis..... E-1

© Kawasaki Heavy Industries, Ltd. 2013

Engine No. Location:
LH crankcase, lower rear

Year & Model	Owner's Manual	A&P Manual		Service Manual		Microfiche
		General	Supplement	Basic	Supplement	
2013 KX450FDF	99976-1718(EN/FR/DE) 99976-1719(IT/ES/NL) 99986-1692(Australia only)			99924-1448-02		99912-1781-02
2014 KX450FEF	99976-1807(EN/FR/DE) 99976-1808(IT/ES/NL) 99986-1767(Australia only)			99924-1448-03		See above

PARTS LIST INFORMATION

This parts catalog lists parts and sub-assemblies provided as spare parts.
When it becomes necessary to replace parts always use KAWASAKI GENUINE PARTS. Strict inspection assures quality and performance of KAWASAKI GENUINE PARTS.

1. HOW TO PLACE AN ORDER FOR PART

When ordering parts be sure to use the catalog for the correct model and year of the vehicle. Include the following items exactly as listed in this catalog on your parts order.

Part Number
Part Name
Color Code
Specify the color using both color code (which is part of the part number) and name when ordering painted parts.
Example: 51001-5074-H8 TANK-COMP-FUEL,EBONY

Parts not shown disassembled in the illustrations of this parts catalog are not sold separately; only the complete units or next higher assemblies illustrated, are supplied, as spare parts.

2. EXPLANATION OF PARTS CATALOG FORMAT

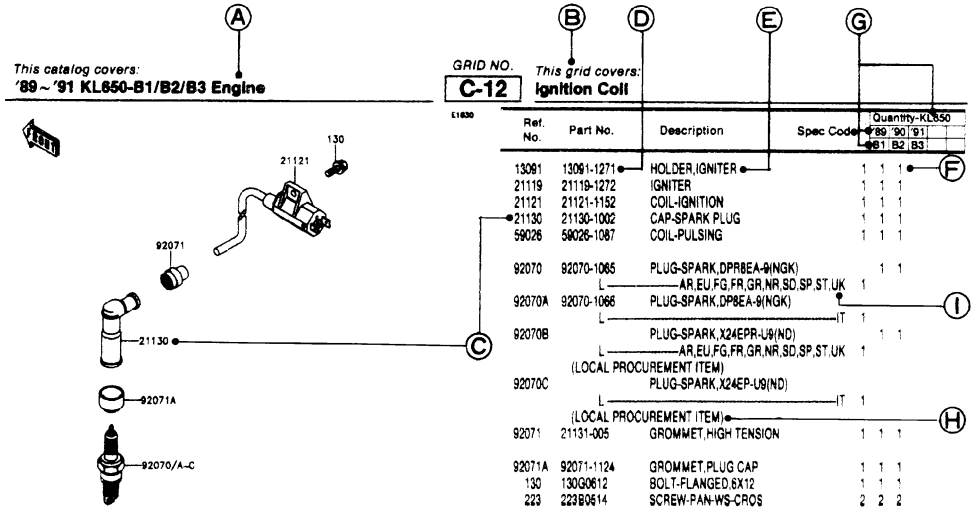

A. Year & Model Title
This title describes the year(s) and model(s) contained in this catalog.

B. Part Group Title
A representative name for the group of parts illustrated on this page.

C. Referernce Number
The reference number is listed on the illustration and parts list. It is the link between the illustration and the parts list.

D. Part Number
The number assigned to a part for the purpose of parts ordering.

1) Part Number (New Structure)
00000 – 0000 – 00 or 00000 – 0000 – 000

(Old Structure)
00000 – 000 – 00

Color Code
Production Number
Function Code

2) Standard Hardware Number
000 0 0000

Size Number
Material or Surface Treatment Code (Alphabet)
Item Number

E. Description
Describes the main function of the part and includes data such as size, number of teeth, color,etc.

List of Abbreviations

(+)	Plus	HEX	Hexagonal	REF	Reference
(-)	Minus	ID =	Inside Diameter	RH	Right Hand
&	And	KPH	Killometers Per Hour	RPM	Revolutions Per Minute
2ND	Second	L	Link	RR	Rear
3RD	Third	L =	Length	STD	Standard
4TH	Fourth	L/	Less	T	Teeth
AR	As Required	LH	Left Hand	T =	Thickness
ASSY	Assembly	LWR	Lower	U/S	Under Size
CA	Cut Away	MM	Millimeter	UPP	Upper
CNT	Center	MPH	Miles Per Hour	V	Volt
COMP	Complete	NA	Not Available	W	Watt
D	Degree	O/S	Over Size	W/	With
FR	Front	OD =	Outside Diameter	WD	With Decal
G	Gram	PR	Ply Rating	WOD	Without Decal

F. Quantity
Specifies how many of a part are required at the indicated position on the illustration.

G. Year & Model
Indicates which parts are used for a specific vehicle year and model.

H. Additional Information
Additional Information is shown as follows:
1) (OPTION) Part is not installed as original equipment, but is available separately.
2) (RACING USE ONLY) Part is to be used for closed course racing only on this vehicle.
3) (OFF-ROAD USE ONLY) Part is for off-road use only this vehicle.
4) (LOCAL PROCUREMENT ITEM) Part is obtainable from a local source. No part number is listed.
5) Technical relationships between old part numbers and new part numbers are shown as follows:
INTERCHANGE - Old part or new part can be used.
SUBSTITUTE - New part replaces old part. Old part cannot be used in place of new part.
6) Mid-Year part number changes on a vehicle are noted by engine or frame number references.

(- KZ400DE001181)	Affected units are from beginning of model year production up to and including this engine number.
(KZ400D-008111 -)	Affected units are from this frame number to the end of model year production.
(KZ400DE008181 - KZ400DE018888)	Affected units are in this engine number range.

I. Specification Code
Identifies the specification of the vehicle for which the part applies. If no spec code is listed, that means the part is used for all specifications.

Spec Code	Specification	'13	'14			
		FDF	FEF			
AS	Australia	O	O			
EU	Europe(General)	O	O			

KX450FDF

Left Side View

Right Side View

KX450FEF

Left Side View

Right Side View

'13 KX450FDF

O : Applicable × : Not applicable

Color: Lime Green (777) (1)

Part No.	Description	Spec.Code AS	EU											
11011-0744-6C	CASE-AIR FILTER,EBONY	O	O											
11065-0766-KW	CAP,BLUE	O	×											
11065-0795-KW	CAP,BLUE	×	O											
14037-0117-6C	SCREEN,LH,EBONY	O	O											
14037-0118-6C	SCREEN,RH,EBONY	O	O											
14091-1523-6C	COVER,REAR DISC,EBONY	O	O											
35004-0319-290	FENDER-FRONT,L.GREEN	O	O											
35023-0357-266	FENDER-REAR,B.WHITE	O	O											
36001-0220-266	COVER-SIDE,LH,B.WHITE	O	O											
36001-0222-266	COVER-SIDE,RH,B.WHITE	O	O											
41025-0094-WC	RIM,FR,1.60X21,BLACK	O	O											
41025-0095-WC	RIM,RR,2.15X19,BLACK	O	O											
41090-0080-WC	WHEEL,FR,1.60X21,AL NIPPLE,BLK	O	O											
41090-0081-WC	WHEEL,RR,2.15X19,AL NIPPLE,BLK	O	O											
43089-0055-KW	CYLINDER-SHOCKABSORBER,BLUE	O	O											
44037-0134-21	HOLDER-FORK UNDER,F.BLACK	O	O											
44039-0109-21	HOLDER-FORK UPPER,F.BLACK	O	O											
45014-0390-23N	SHOCKABSORBER,SPG BLK+AJ BLUE	O	×											
45014-0403-23N	SHOCKABSORBER,SPG BLK+ADJ BLUE	×	O											
46012-0013-21	HOLDER-HANDLE,LWR,F.BLACK	O	O											
46012-0020-21	HOLDER-HANDLE,UPP,FAT BAR,BLK	O	O											
46012-0021-21	HOLDER-HANDLE,LWR,FAT BAR,BLK	O	O											
46012-0048-21	HOLDER-HANDLE,LWR,F.BLACK	O	O											
46012-0324-21	HOLDER-HANDLE,UPP,F.BLACK	O	O											
49089-0779-25M	SHROUD-ENGINE,LH,GREEN/EBONY	O	O											
49089-0780-25M	SHROUD-ENGINE,RH,GREEN/EBONY	O	O											
53066-0357-336	SEAT-ASSY,GREEN/BLACK	O	O											
55020-0434-6C	GUARD,ENGINE,SIDE,RH,EBONY	O	O											
55020-0440-6C	GUARD,ENGINE,LWR,EBONY	O	O											
55020-0441-6C	GUARD,FORK,LH,EBONY	O	O											

'13 KX450FDF

O : Applicable ×: Not applicable

Color: Lime Green (777) **(2)**

Part No.	Description	Spec.Code AS	EU											
55020-0442-6C	GUARD,FORK,RH,EBONY	O	O											
55020-0458-6C	GUARD,REAR CALIPER,EBONY	O	O											
58029-0056-266	PLATE-NUMBER,B.WHITE	O	O											
92145-0638-17D	SPRING,SHOCK,K=52N/MM,BLACK	O	O											
92145-0716-17D	SPRING,SHOCK,K=54N/MM,BLACK	O	O											
92145-0762-17D	SPRING,SHOCK,K=56N/MM,BLACK	O	O											

'14 KX450FEF

O : Applicable ×: Not applicable

Color: Lime Green (777) (1)

Part No.	Description	Spec.Code AS	EU											
11011-0744-6C	CASE-AIR FILTER,EBONY	O	O											
11065-0795-KW	CAP,BLUE	O	O											
14037-0117-6C	SCREEN,LH,EBONY	O	O											
14037-0118-6C	SCREEN,RH,EBONY	O	O											
14091-1523-6C	COVER,REAR DISC,EBONY	O	O											
35004-0319-290	FENDER-FRONT,L.GREEN	O	O											
35023-0357-266	FENDER-REAR,B.WHITE	O	O											
36001-0220-266	COVER-SIDE,LH,B.WHITE	O	O											
36001-0222-266	COVER-SIDE,RH,B.WHITE	O	O											
41025-0094-WC	RIM,FR,1.60X21,BLACK	O	O											
41025-0095-WC	RIM,RR,2.15X19,BLACK	O	O											
41090-0080-WC	WHEEL,FR,1.60X21,AL NIPPLE,BLK	O	O											
41090-0081-WC	WHEEL,RR,2.15X19,AL NIPPLE,BLK	O	O											
43089-0055-KW	CYLINDER-SHOCKABSORBER,BLUE	O	O											
44037-0134-21	HOLDER-FORK UNDER,F.BLACK	O	O											
44039-0109-21	HOLDER-FORK UPPER,F.BLACK	O	O											
45014-0403-23N	SHOCKABSORBER,SPG BLK+ADJ BLUE	O	O											
46012-0013-21	HOLDER-HANDLE,LWR,F.BLACK	O	O											
46012-0020-21	HOLDER-HANDLE,UPP,FAT BAR,BLK	O	O											
46012-0021-21	HOLDER-HANDLE,LWR,FAT BAR,BLK	O	O											
46012-0048-21	HOLDER-HANDLE,LWR,F.BLACK	O	O											
46012-0324-21	HOLDER-HANDLE,UPP,F.BLACK	O	O											
49089-0779-25M	SHROUD-ENGINE,LH,GREEN/EBONY	O	O											
49089-0780-25M	SHROUD-ENGINE,RH,GREEN/EBONY	O	O											
53066-0357-336	SEAT-ASSY,GREEN/BLACK	O	O											
55020-0434-6C	GUARD,ENGINE,SIDE,RH,EBONY	O	O											
55020-0440-6C	GUARD,ENGINE,LWR,EBONY	O	O											
55020-0441-6C	GUARD,FORK,LH,EBONY	O	O											
55020-0442-6C	GUARD,FORK,RH,EBONY	O	O											
55020-0458-6C	GUARD,REAR CALIPER,EBONY	O	O											

'14 KX450FEF

O : Applicable ×: Not applicable

Color: Lime Green (777) (2)

Part No.	Description	Spec.Code AS	EU											
58029-0056-266	PLATE-NUMBER,B.WHITE	O	O											
92145-0638-17D	SPRING,SHOCK,K=52N/MM,BLACK	O	O											
92145-0716-17D	SPRING,SHOCK,K=54N/MM,BLACK	O	O											
92145-0762-17D	SPRING,SHOCK,K=56N/MM,BLACK	O	O											
92154-0450-KW	BOLT,ADJ.,BLUE	O	O											
92154-1077-KW	BOLT,BLUE	O	O											

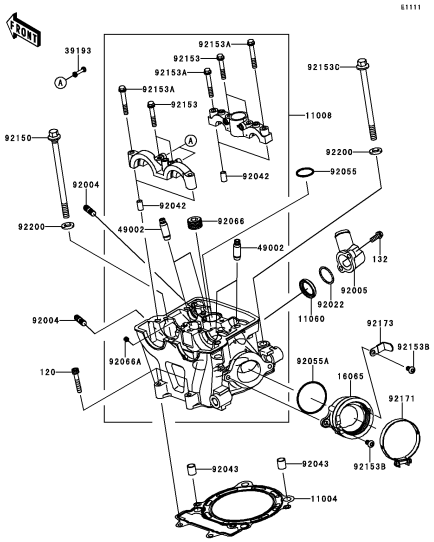

B-3 Cylinder Head

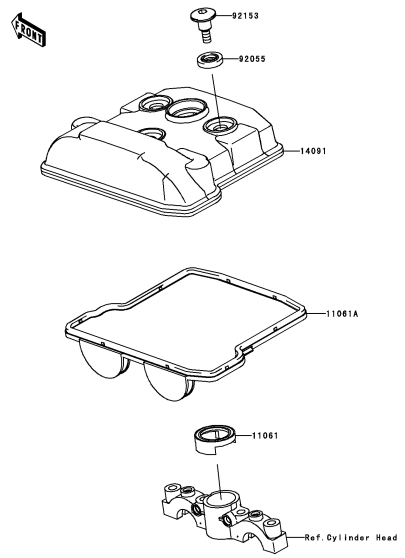

B-4 Cylinder Head Cover

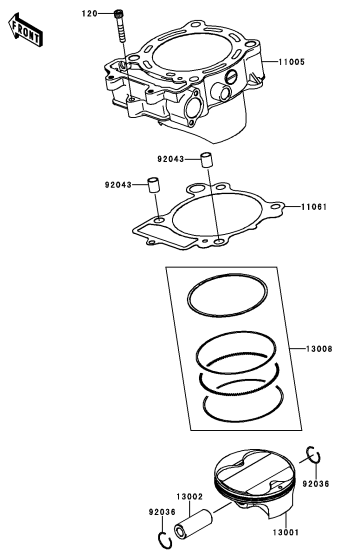

B-5 Cylinder/Piston(s)

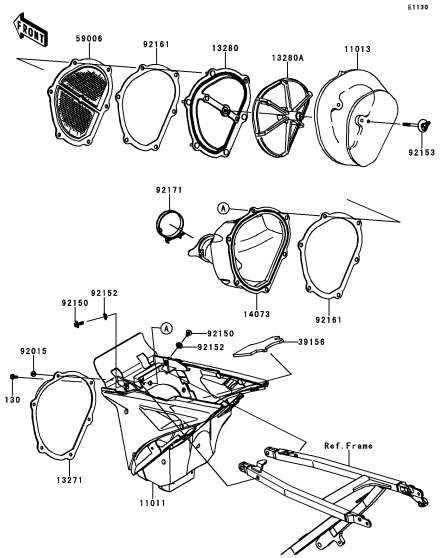

B-6 Air Cleaner

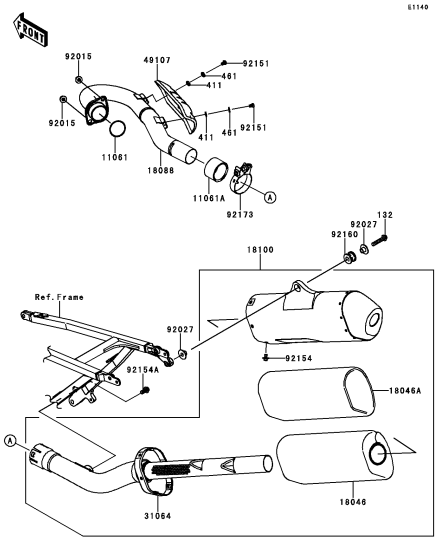

B-7 Muffler(s)

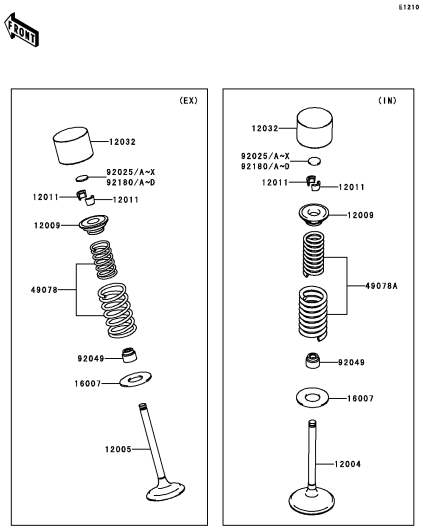

B-8 Valve(s)

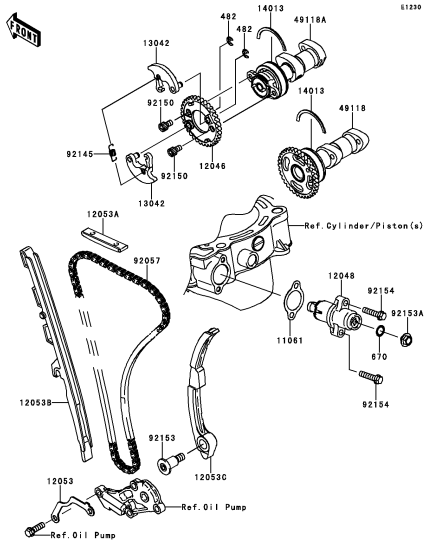

B-9 Camshaft(s)/Tensioner

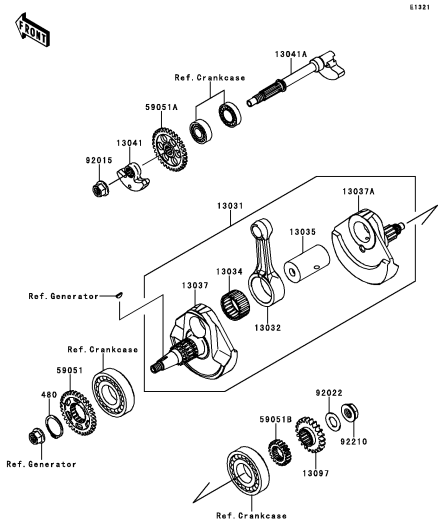

B-10 Crankshaft

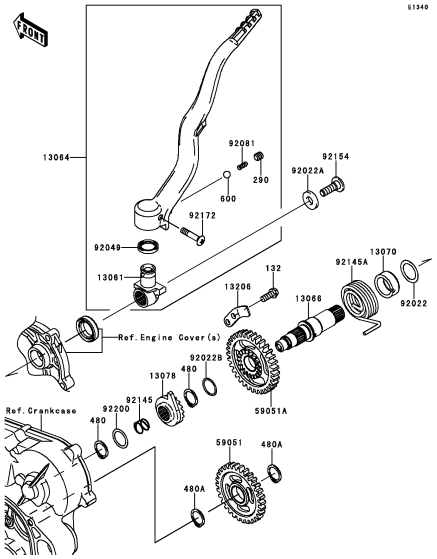

B-11 Kickstarter Mechanism

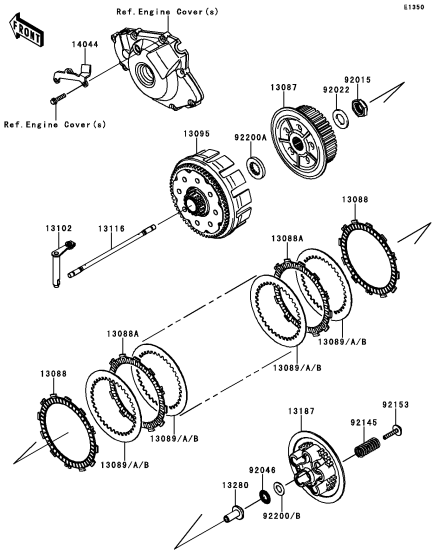

B-12 Clutch

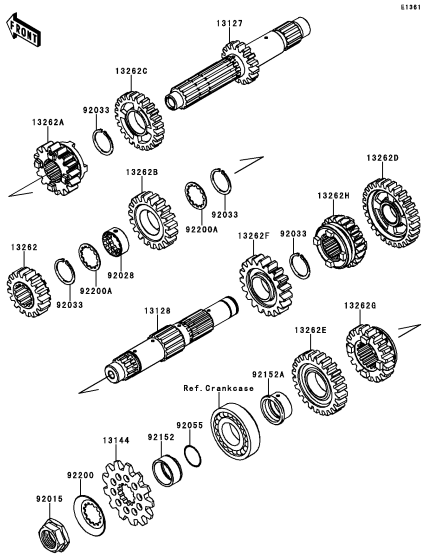

B-13 Transmission

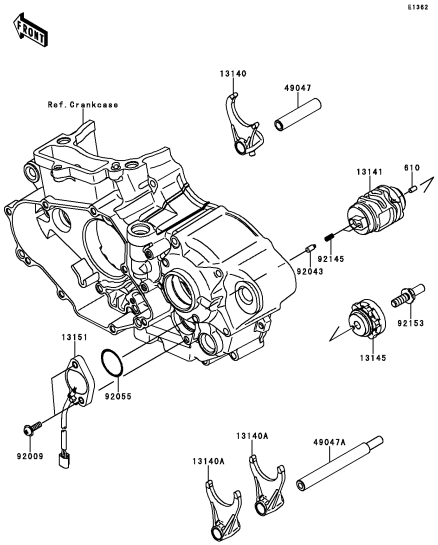

B-14 Gear Change Drum/Shift Fork(s)

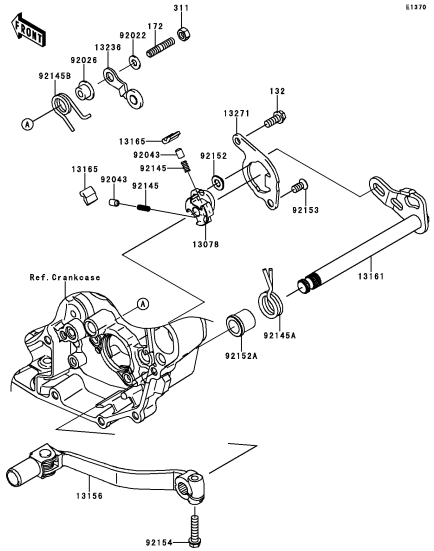

C-3 Gear Change Mechanism

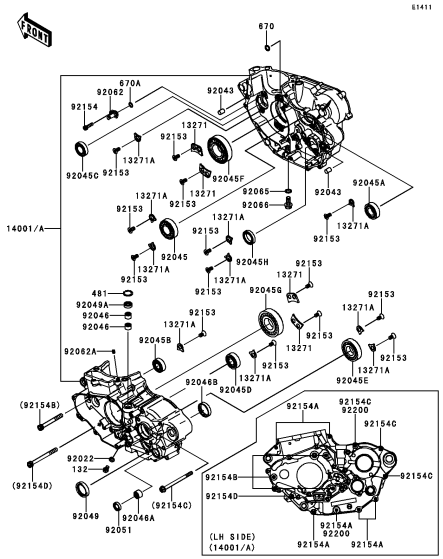

C-4 Crankcase

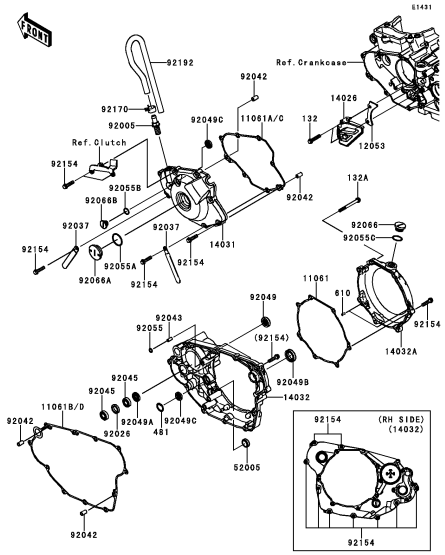

C-5 Engine Cover(s)

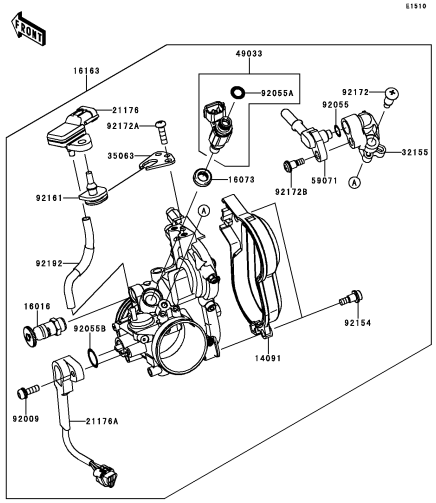

C-6 Throttle

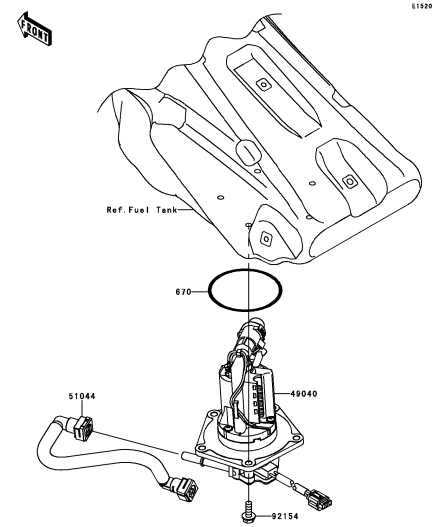

C-7 Fuel Pump

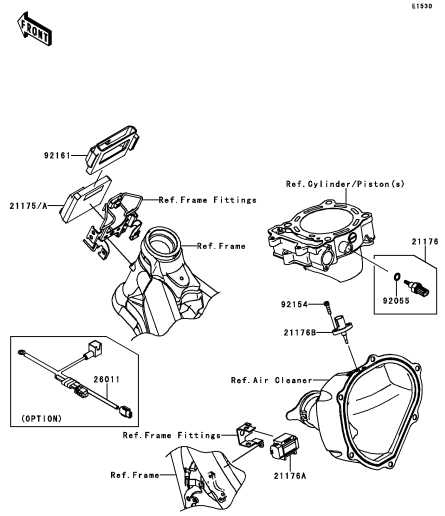

C-8 Fuel Injection

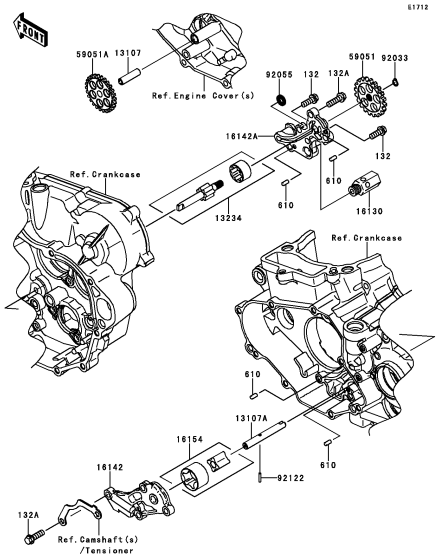

C-9 **Oil Pump**

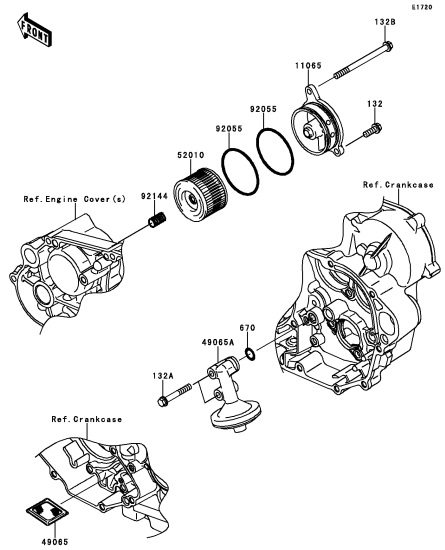

C-10 **Oil Filter**

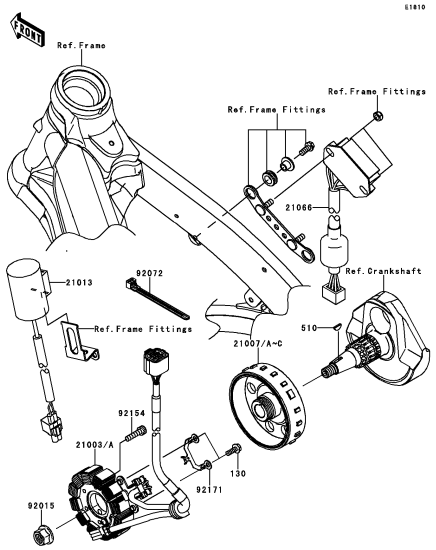

C-11 **Generator**

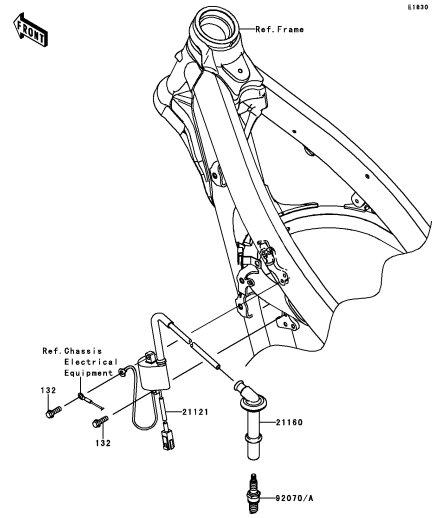

C-12 **Ignition System**

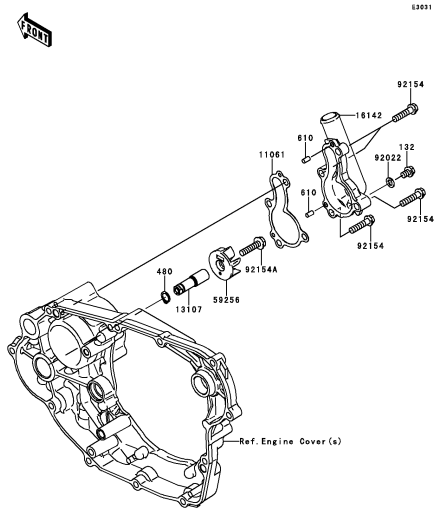

C-13 **Water Pump**

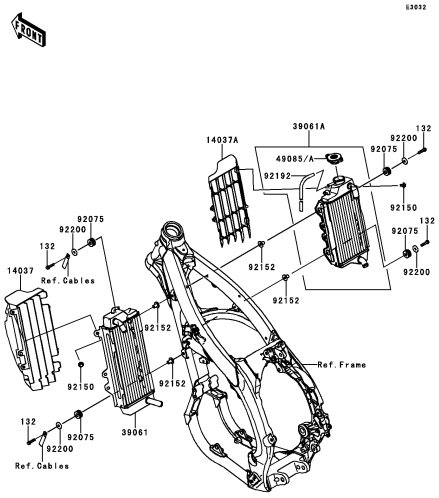

C-14 **Radiator**

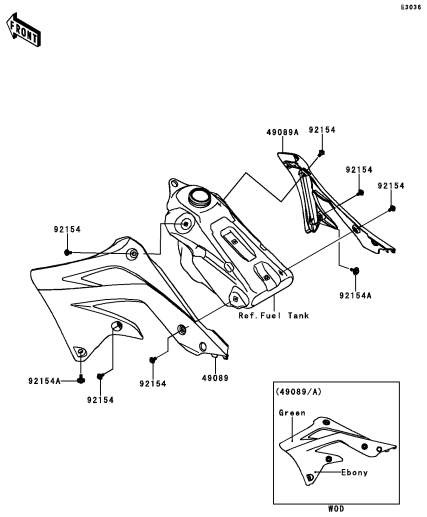

D-3 **Engine Shrouds**

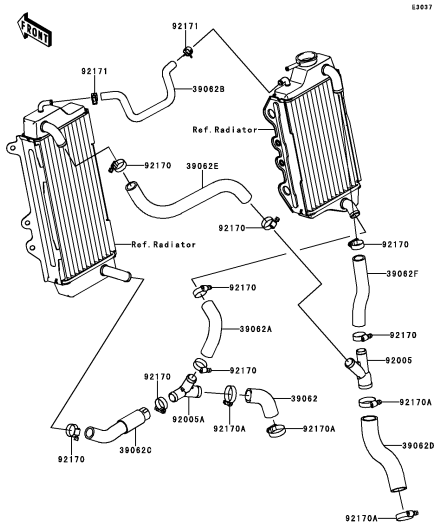

D-4 **Water Pipe**

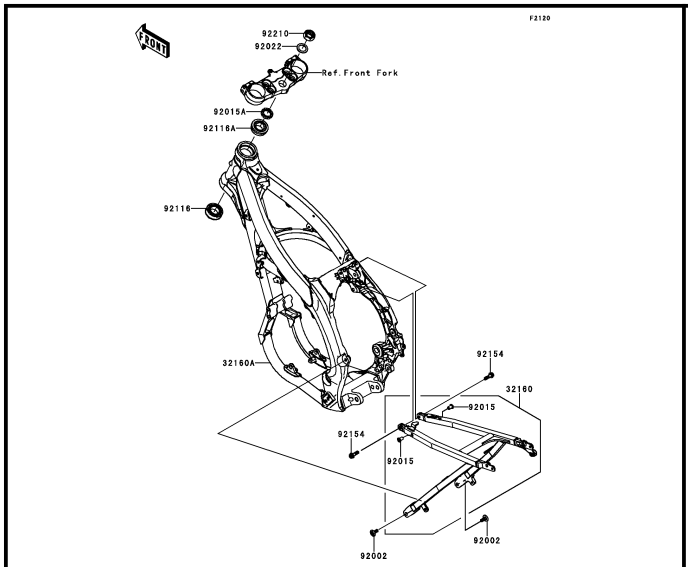

E-3 **Frame**

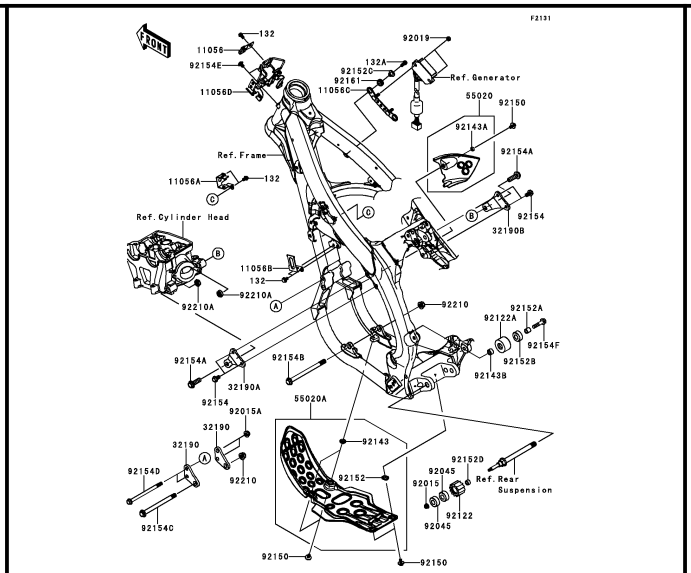

E-4 **Frame Fittings**

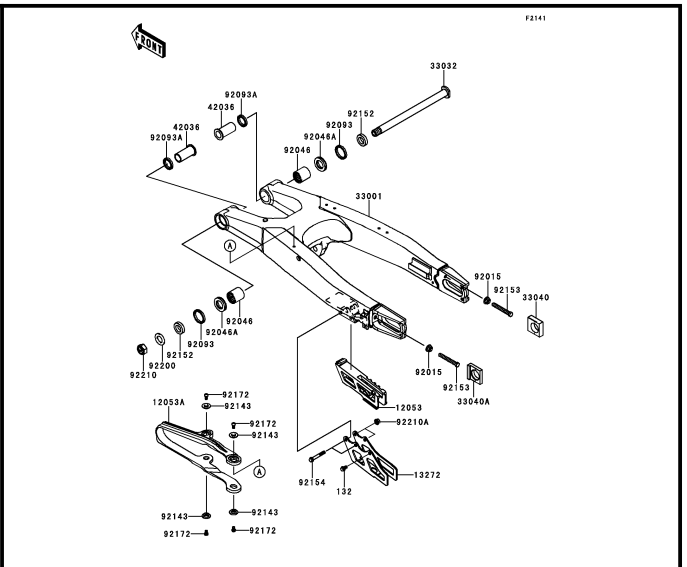

E-5 **Swingarm**

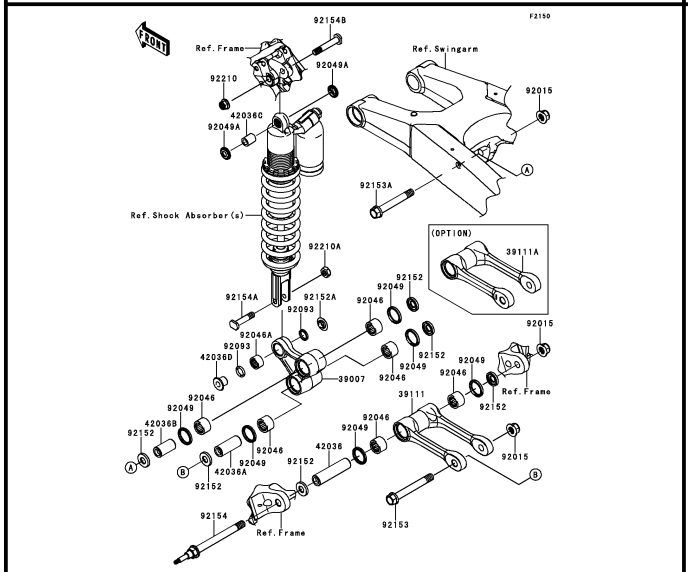

E-6 **Suspension**

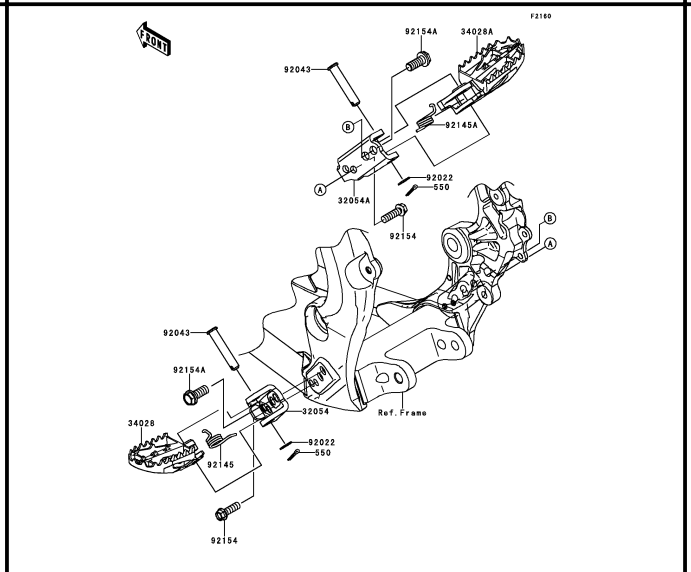

E-7 **Footrests**

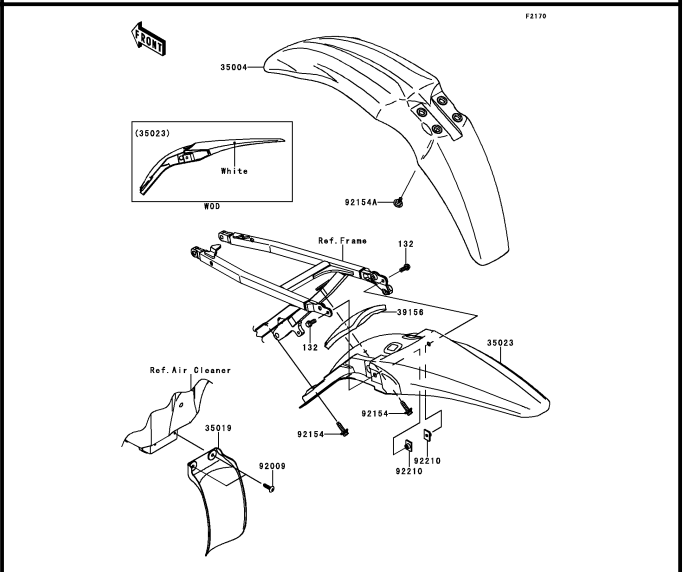

E-8 **Fenders**

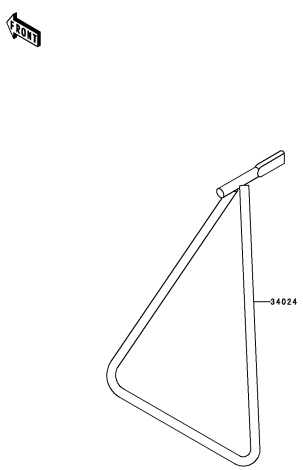

E-9 Stand(s)

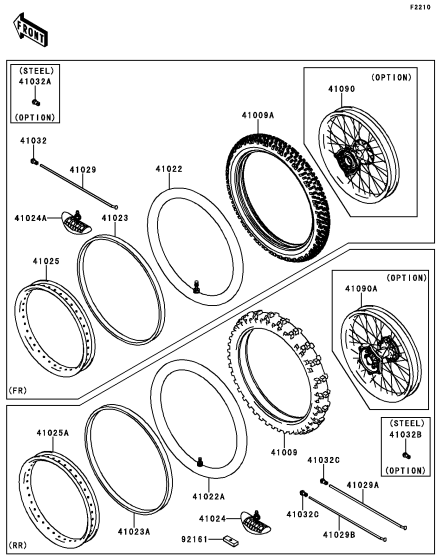

E-10 Tires

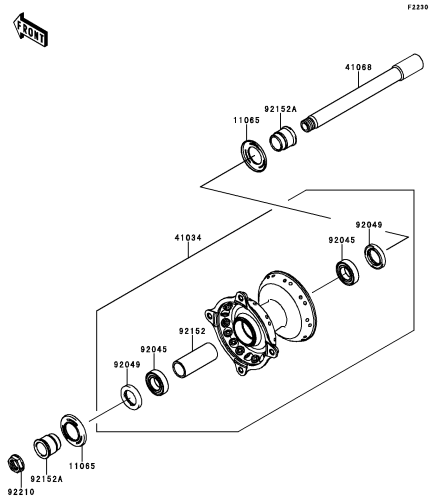

E-11 Front Hub

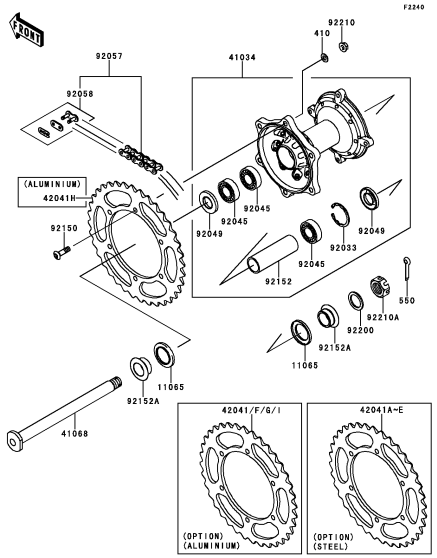

E-12 Rear Hub

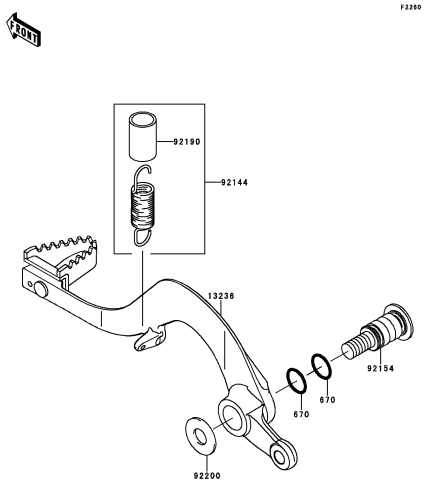

E-13 Brake Pedal

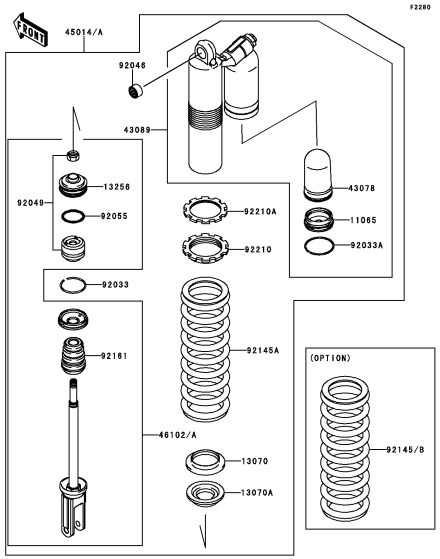

E-14 Shock Absorber(s)

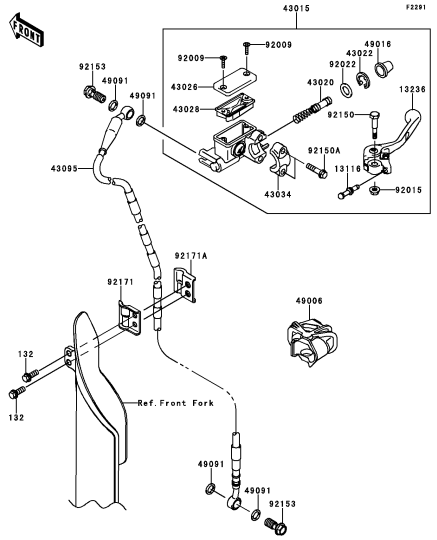

F-3 **Front Master Cylinder**

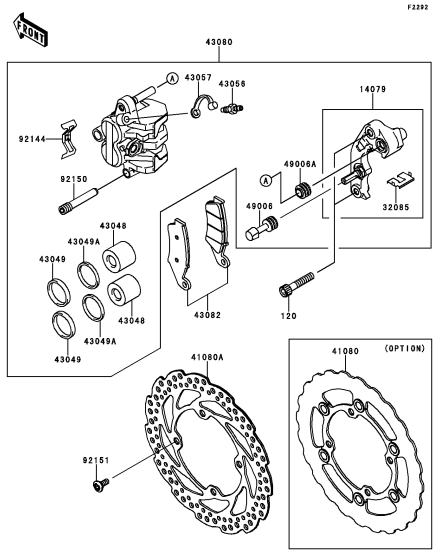

F-4 **Front Brake**

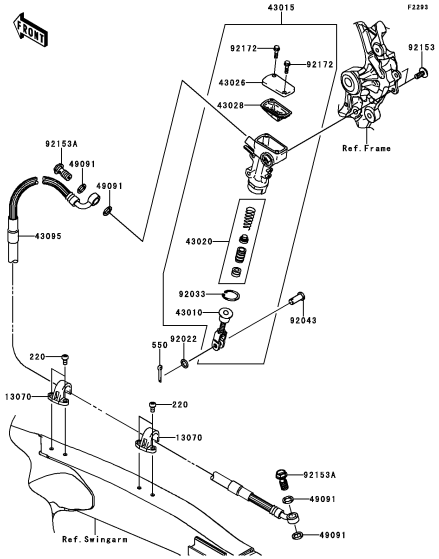

F-5 **Rear Master Cylinder**

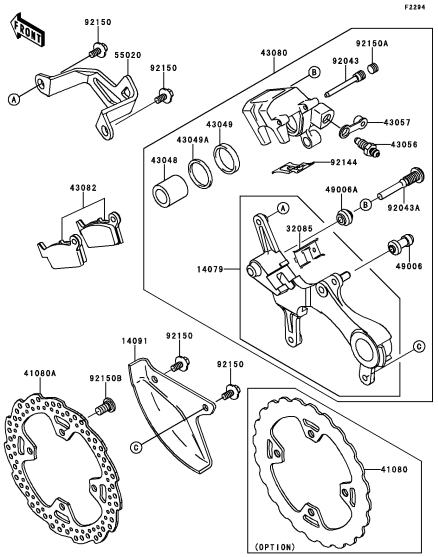

F-6 **Rear Brake**

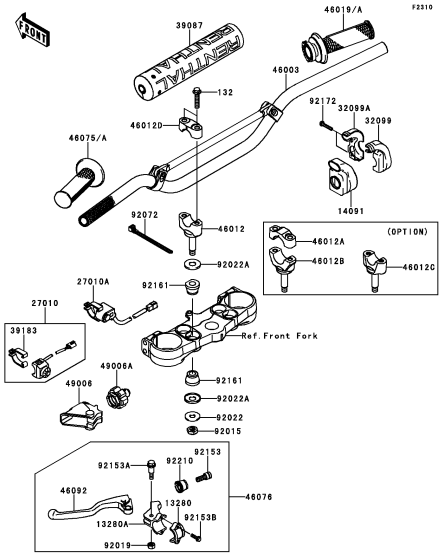

F-7 **Handlebar**

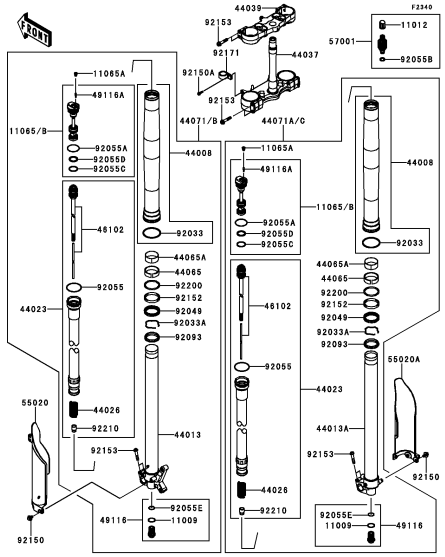

F-8 **Front Fork(1/2)**

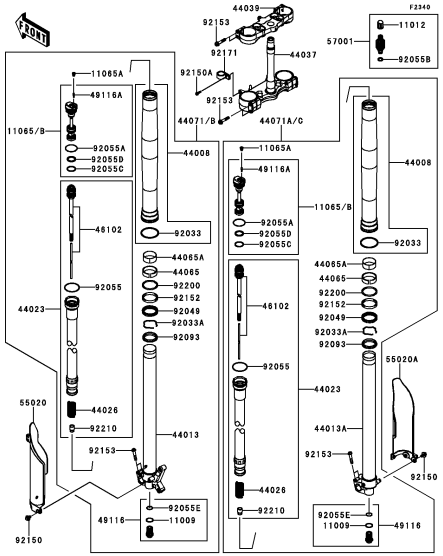

F-9 **Front Fork(2/2)**

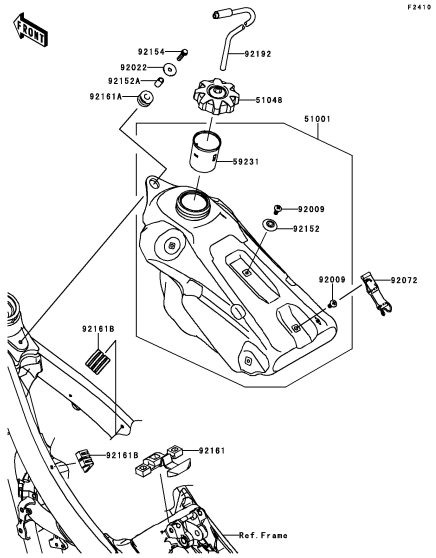

F-10 **Fuel Tank**

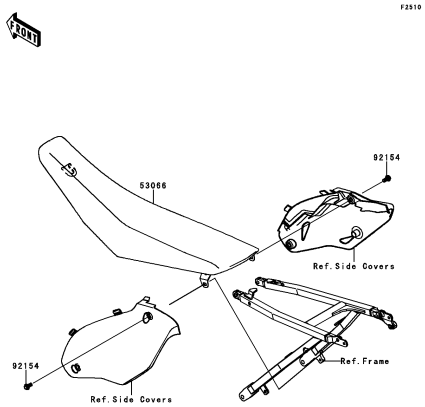

F-11 **Seat**

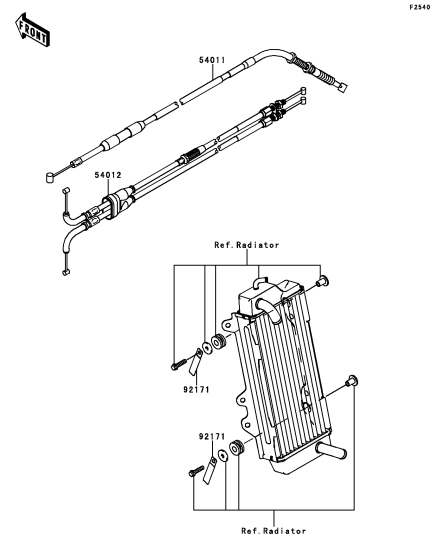

F-12 **Cables**

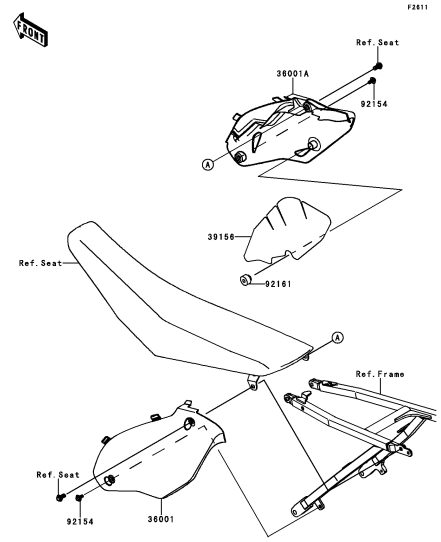

F-13 **Side Covers**

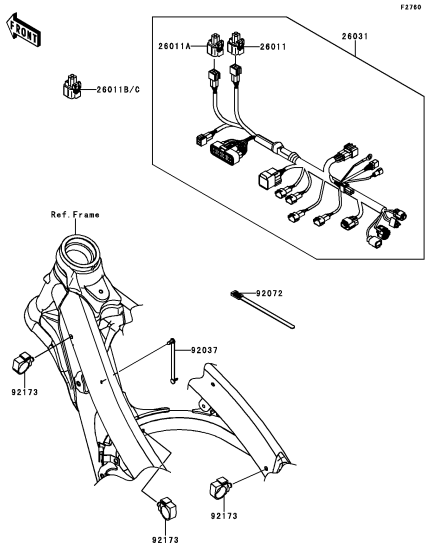

F-14 **Chassis Electrical Equipment**

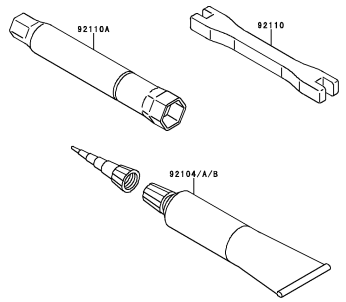

G-3 Owner's Tools

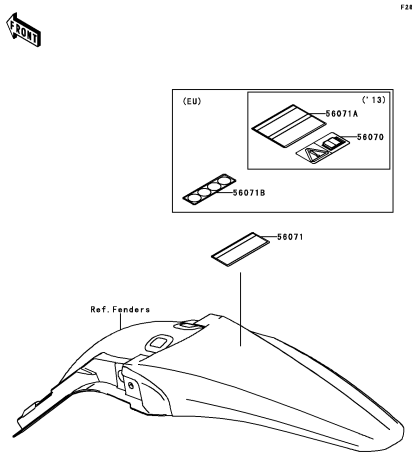

G-4 Labels

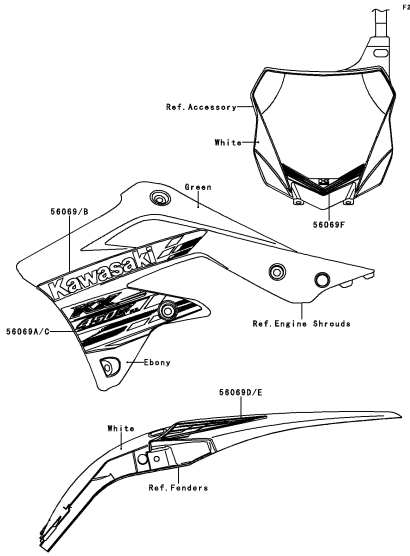

G-5 Decals(FDF)

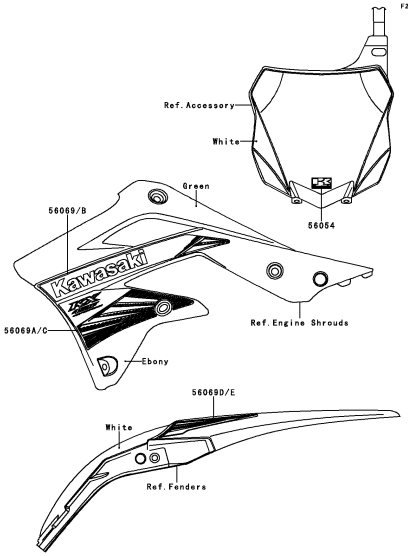

G-6 Decals(FEF)

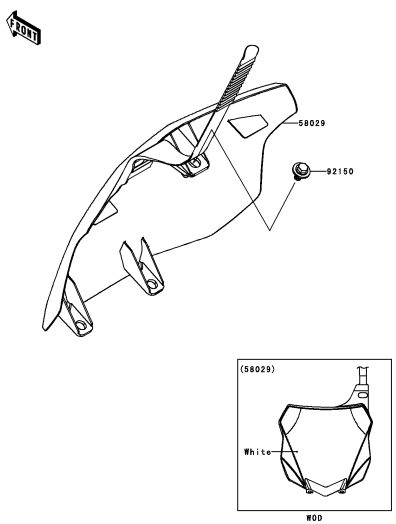

G-7 Accessory

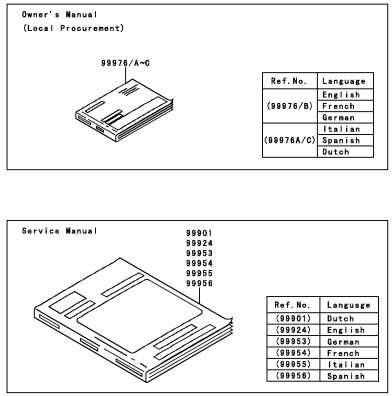

G-8 Manual(EU)

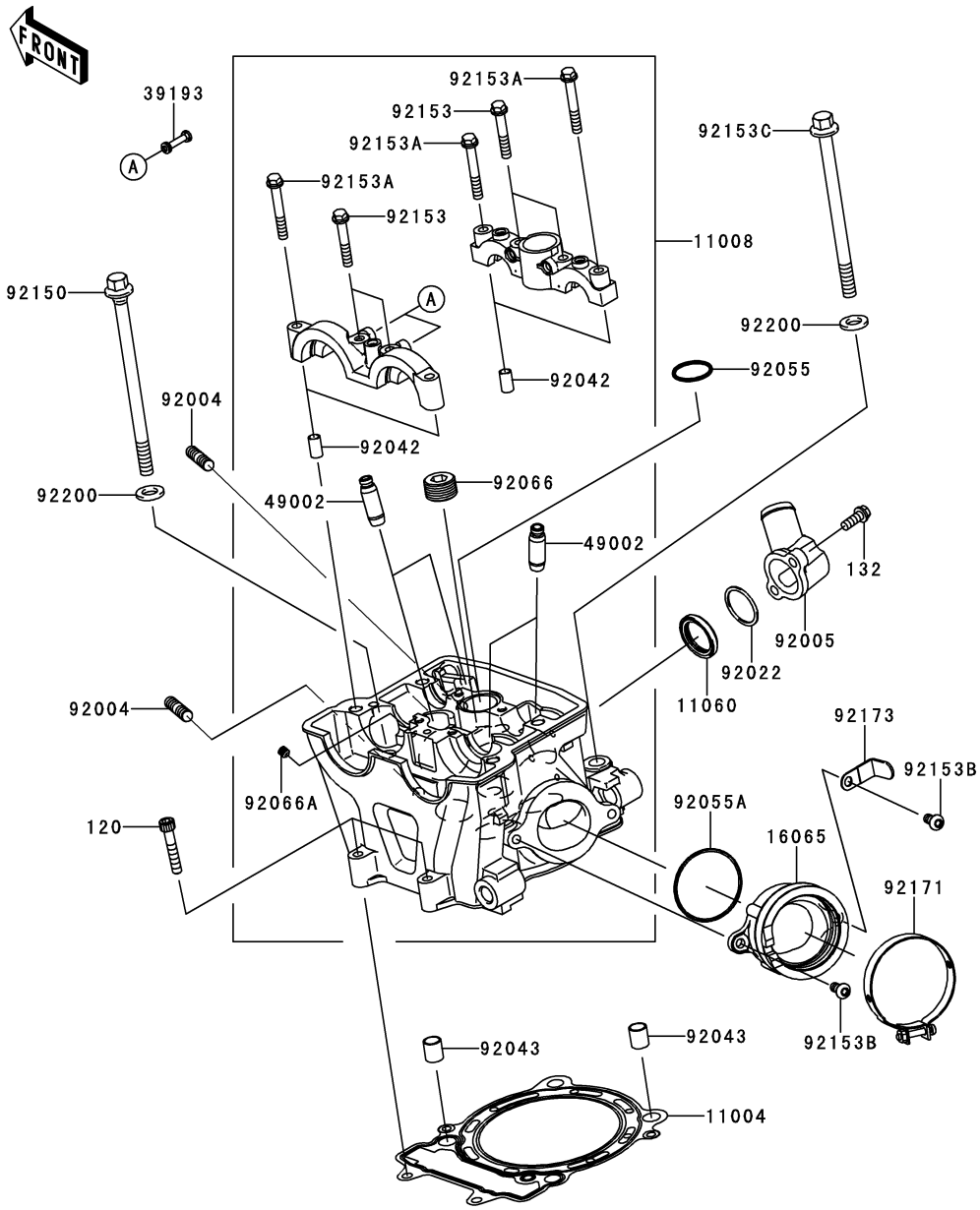

Ref. No.	Part No.	Description	Spec Code	Quantity-KX450 '13 FDF	'14 FEF			
11004	11004-0088	GASKET-HEAD		1	1			
11008	11008-0173	HEAD-COMP-CYLINDER		1	1			
11060	11060-1300	GASKET,THERMOSTAT		1	1			
16065	16065-0068	HOLDER-CARBURETOR		1	1			
39193	39193-0027	PIPE-OIL		2	2			
49002	49002-0020	GUIDE-VALVE		4	4			
92004	92004-0025	STUD,8X22		2	2			
92005	92005-0018	FITTING		1	1			
92022	92022-161	WASHER,25.3X30X1		1	1			
92042	92042-007	PIN,DOWEL,6.3X8X14		4	4			
92043	92043-4009	PIN,10.1X12X14		2	2			
92055	92055-0046	RING-O,23.5X2.0		1	1			
92055A	92055-1600	RING-O,47X1.9		1	1			
92066	92066-0002	PLUG,PT1/2X12.5		1	1			
92066A	92066-0068	PLUG,6X6		1	1			
92150	92150-1935	BOLT,L=140		2	2			
92153	92153-0338	BOLT,6X38		4	4			
92153A	92153-0339	BOLT,6X45		4	4			
92153B	92153-0406	BOLT,TORX,6X14		2	2			
92153C	92153-1001	BOLT,FLANGED-SMALL,10X127		2	2			
92171	92171-0857	CLAMP,62MM		1	1			
92173	92173-0975	CLAMP		1	1			
92200	92200-0114	WASHER,10.5X19X2.3		4	4			
120	120CA0635	BOLT-SOCKET,6X35		2	2			
132	132BA0616	BOLT-FLANGED-SMALL,6X16		2	2			

GRID NO. **B-4**

This grid covers:
Cylinder Head Cover

E1112

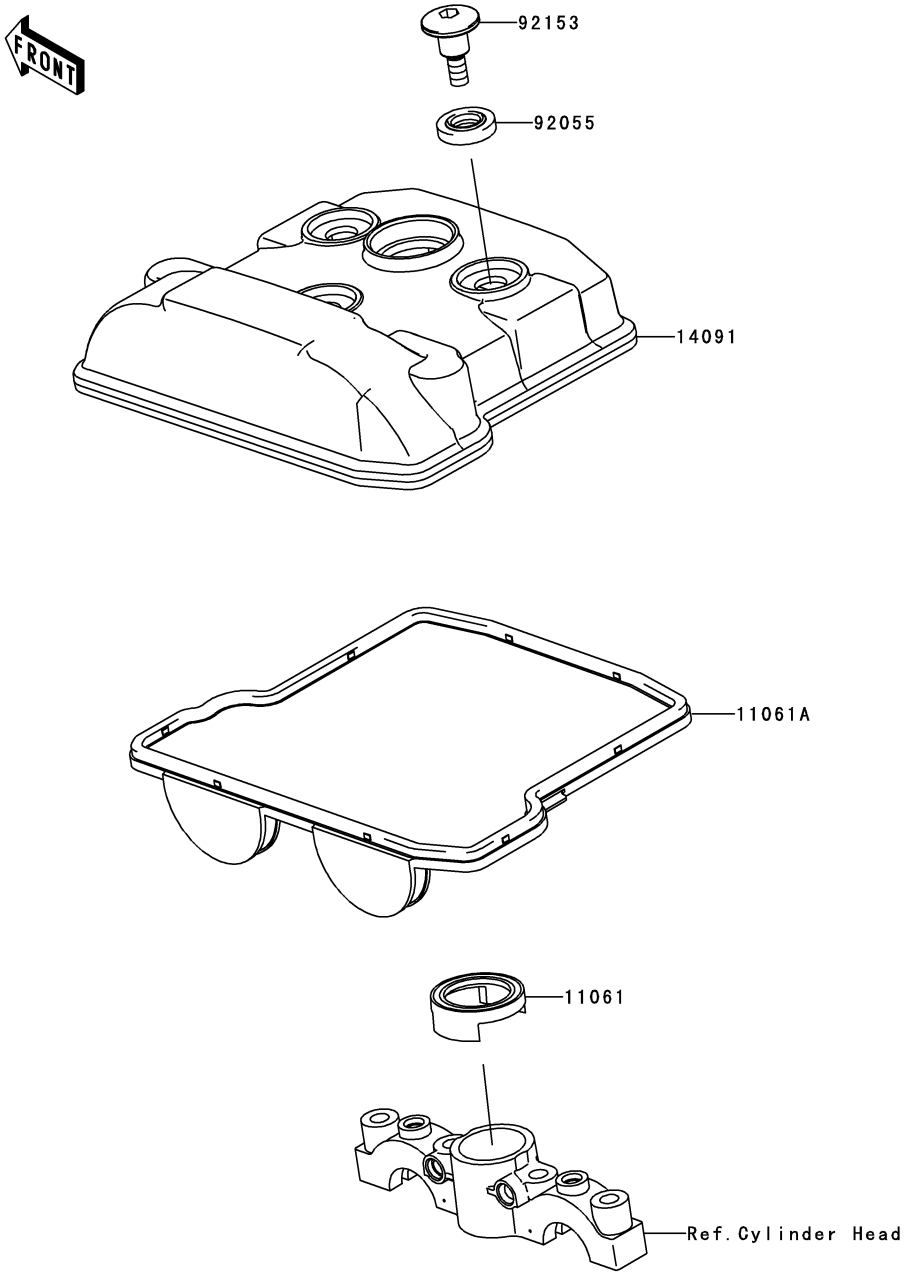

Ref. No.	Part No.	Description	Spec Code	Quantity-KX450 '13 FDF	'14 FEF			
11061	11061-0079	GASKET,PLUG HOLE		1	1			
11061A	11061-0351	GASKET,HEAD COVER		1	1			
14091	14091-1631	COVER,CYLINDER HEAD		1	1			
92055	92055-1352	RING-O,HEAD COVER BOLT		3	3			
92153	92153-1779	BOLT,SOCKET,6X22.5		3	3			

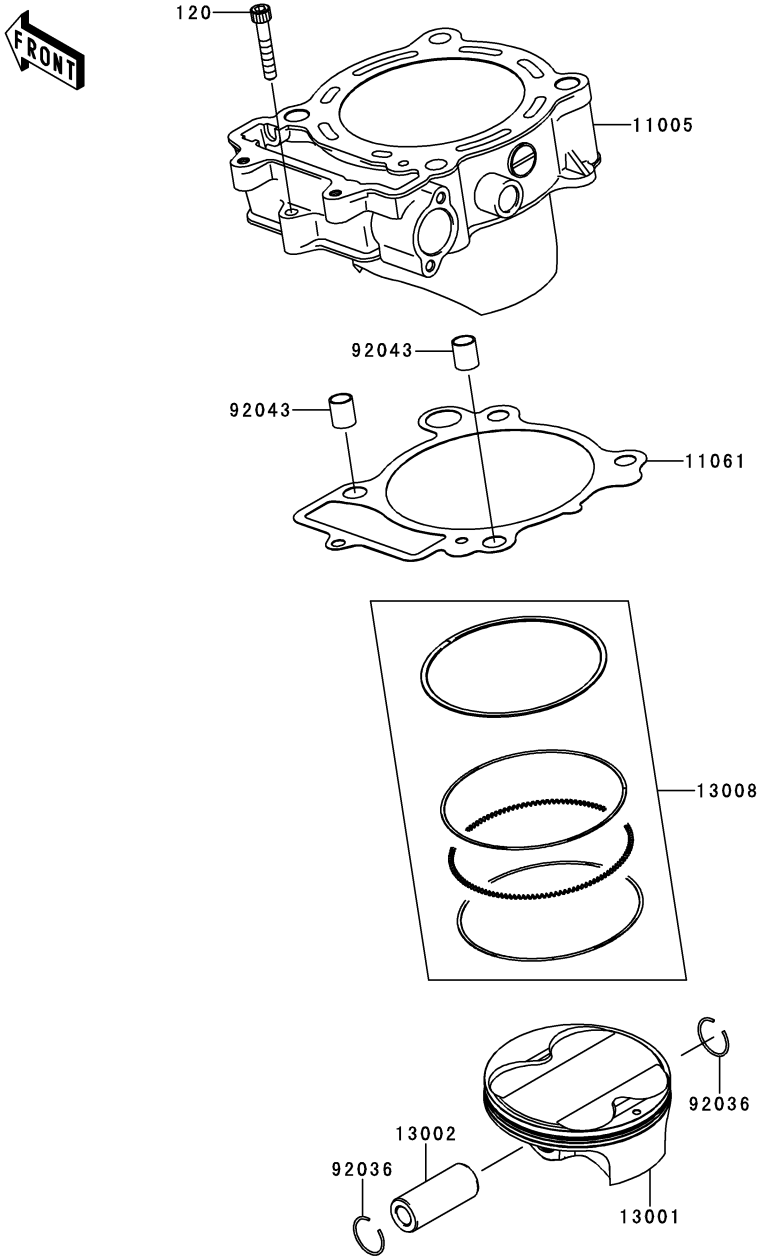

E1120

Ref. No.	Part No.	Description	Spec Code	Quantity-KX450 '13 FDF	'14 FEF			
11005	11005-0132	CYLINDER-ENGINE		1	1			
11061	11061-0768	GASKET,CYLINDER BASE		1	1			
13001	13001-0736	PISTON-ENGINE		1	1			
13002	13002-0028	PIN-PISTON		1	1			
13008	13008-0555	RING-SET-PISTON		1	1			
92036	92036-008	RING-SNAP,PISTON PIN		2	2			
92043	92043-4009	PIN,10.1X12X14		2	2			
120	120CA0635	BOLT-SOCKET,6X35		1	1			

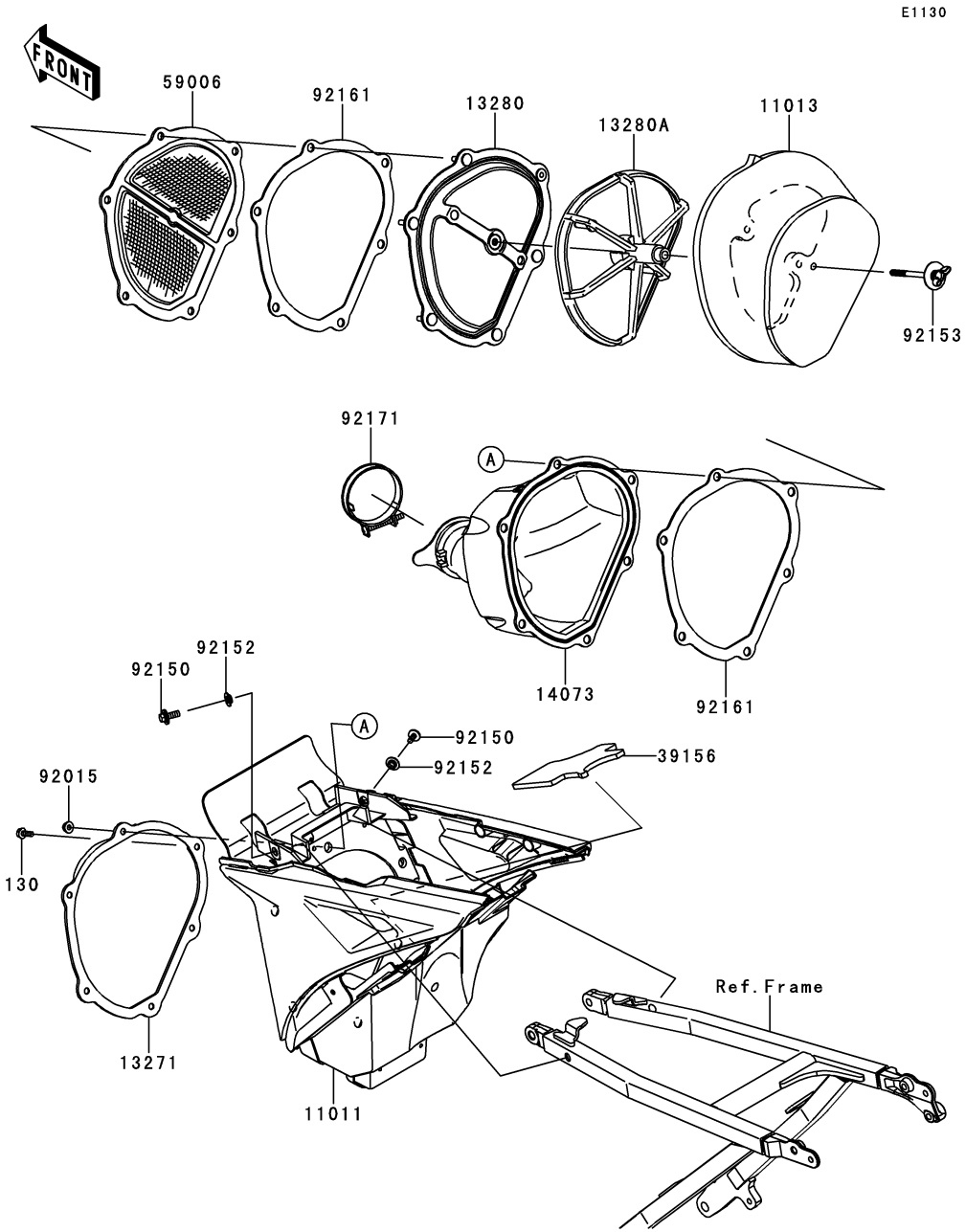

Ref. No.	Part No.	Description	Spec Code	Quantity-KX450 '13 FDF	'14 FEF			
11011	11011-0744-6C	CASE-AIR FILTER,EBONY		1	1			
11013	11013-0722	ELEMENT-AIR FILTER		1	1			
13271	13271-0730	PLATE,DUCT FITTING		1	1			
13280	13280-0170	HOLDER		1	1			
13280A	13280-0751	HOLDER,ELEMENT		1	1			
14073	14073-0726	DUCT,AIR FILTER		1	1			
39156	39156-0829	PAD		1	1			
59006	59006-0011	ARRESTER-FLAME		1	1			
92015	92015-1259	NUT,FLANGED,5MM		5	5			
92150	92150-1506	BOLT,FLANGED,6X16		2	2			
92152	92152-0275	COLLAR		2	2			
92153	92153-0623	BOLT,6X75		1	1			
92161	92161-0213	DAMPER		2	2			
92171	92171-1990	CLAMP,57.5MM		1	1			
130	130BA0512	BOLT-FLANGED,5X12		1	1			

E1140

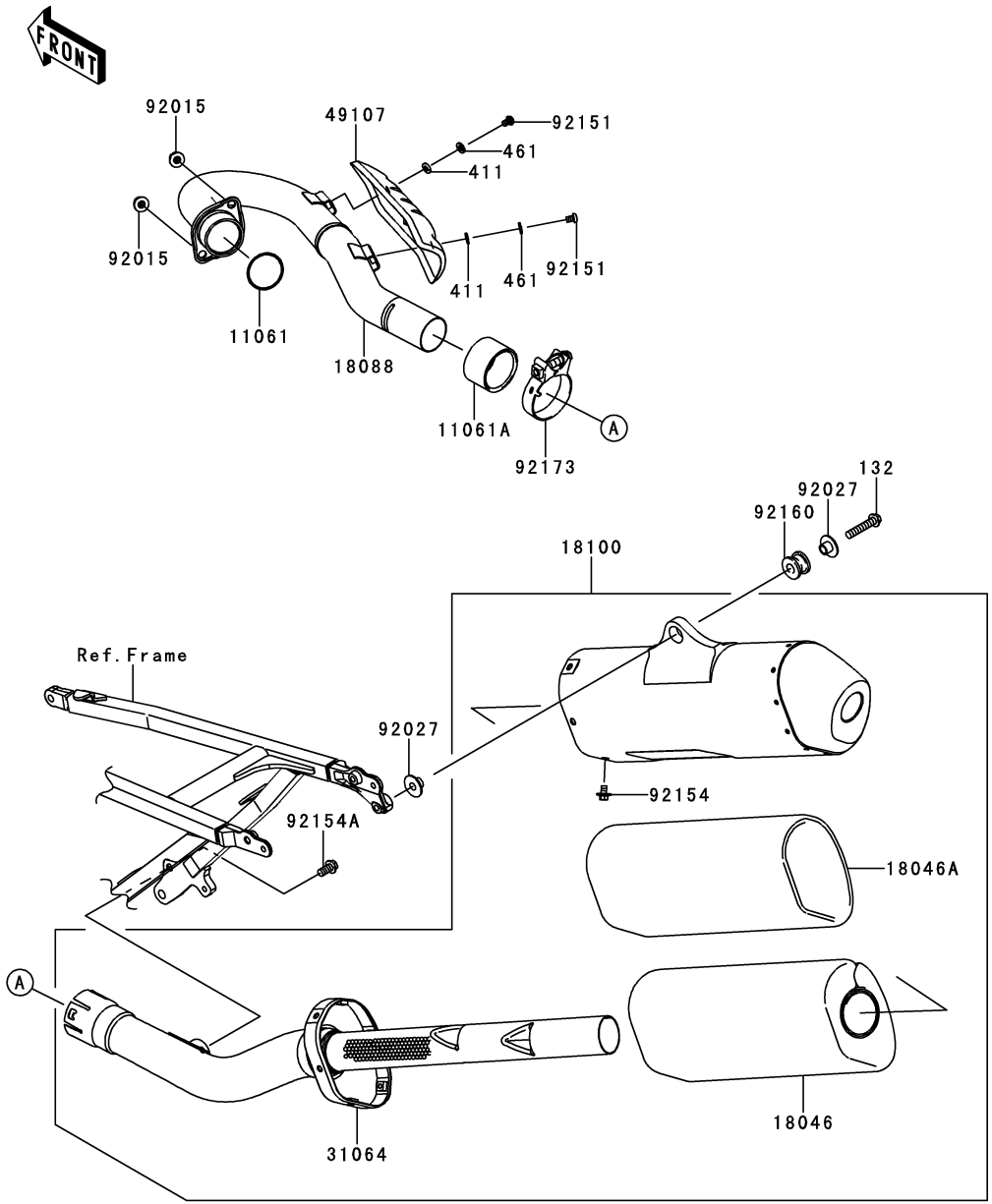

Ref. No.	Part No.	Description	Spec Code	Quantity-KX450 '13 FDF	'14 FEF			
11061	11061-0082	GASKET,38.9X46.4X3.0		1	1			
11061A	11061-0434	GASKET,CONNECTING		1	1			
18046	18046-0568	WOOL		1	1			
18046A	18046-0579	WOOL		1	1			
18088	18088-0609	PIPE-EXHAUST		1	1			
18100	18100-0564	BODY-ASSY-MUFFLER		1	1			
31064	31064-0623	PIPE-COMP		1	1			
49107	49107-0159	COVER-EXHAUST PIPE		1	1			
92015	92015-1402	NUT,8MM		2	2			
92027	92027-1653	COLLAR,FLANGED,8.8X10.6		2	2			
92151	92151-1449	BOLT,SOCKET,6X10		2	2			
92154	92154-0396	BOLT,FLANGED,6X10		6	6			
92154A	92154-0519	BOLT,FLANGED,8X18		1	1			
92160	92160-1116	DAMPER,MUFFLER MOUNT		1	1			
92173	92173-0885	CLAMP,57MM		1	1			
132	132BA0840	BOLT-FLANGED-SMALL,8X40		1	1			
411	411S0600	WASHER-PLAIN,6MM		2	2			
461	461S0600	WASHER-SPRING,6MM		2	2			

E1210

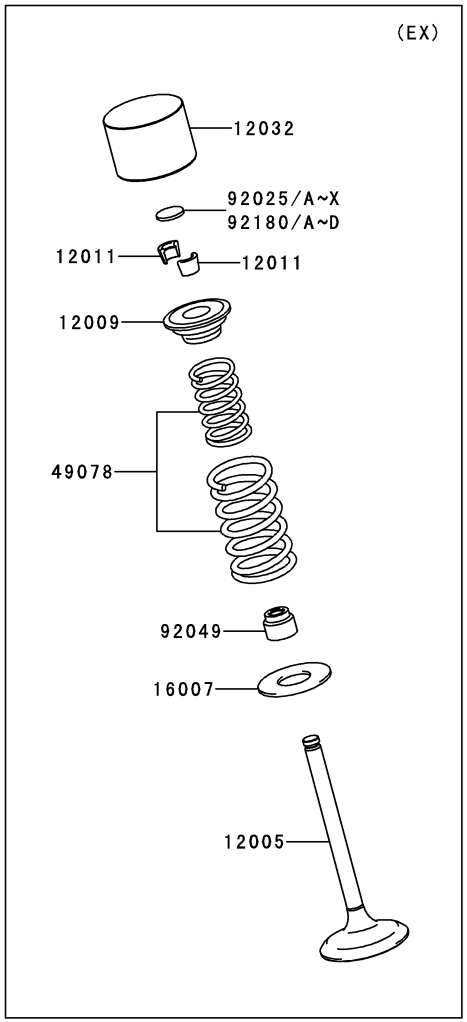

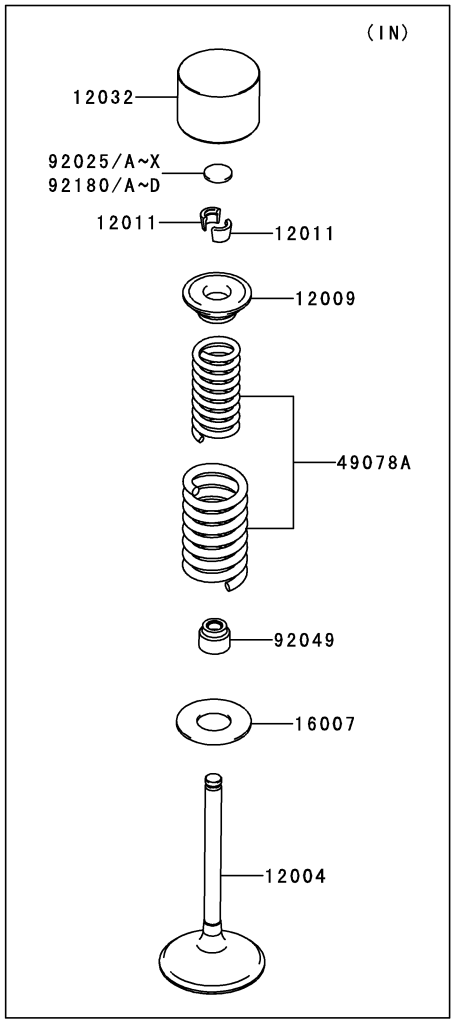

Ref. No.	Part No.	Description	Spec Code	Quantity-KX450 '13 FDF	'14 FEF			
12004	12004-0034	VALVE-INTAKE		2	2			
12005	12005-0049	VALVE-EXHAUST		2	2			
12009	12009-0008	RETAINER-VALVE SPRING		4	4			
12011	12011-1003	COLLET		8	8			
12032	12032-0702	TAPPET		4	4			
16007	16007-0022	SEAT-SPRING,11.6X25.5X1.0		4	4			
49078	49078-0018	SPRING-ENGINE VALVE,EXHAUST		2	2			
49078A	49078-0043	SPRING-ENGINE VALVE,INTAKE		2	2			
92025	92025-1870	SHIM,T=2.00		4	4			
92025A	92025-1871	SHIM,T=2.05		AR	AR			
92025B	92025-1872	SHIM,T=2.10		AR	AR			
92025C	92025-1873	SHIM,T=2.15		AR	AR			
92025D	92025-1874	SHIM,T=2.20		AR	AR			
92025E	92025-1875	SHIM,T=2.25		AR	AR			
92025F	92025-1876	SHIM,T=2.30		AR	AR			
92025G	92025-1877	SHIM,T=2.35		AR	AR			
92025H	92025-1878	SHIM,T=2.40		AR	AR			
92025I	92025-1879	SHIM,T=2.45		AR	AR			
92025J	92025-1880	SHIM,T=2.50		AR	AR			
92025K	92025-1881	SHIM,T=2.55		AR	AR			
92025L	92025-1882	SHIM,T=2.60		AR	AR			
92025M	92025-1883	SHIM,T=2.65		AR	AR			
92025N	92025-1884	SHIM,T=2.70		AR	AR			
92025O	92025-1885	SHIM,T=2.75		AR	AR			
92025P	92025-1886	SHIM,T=2.80		AR	AR			
92025Q	92025-1887	SHIM,T=2.85		AR	AR			
92025R	92025-1888	SHIM,T=2.90		AR	AR			
92025S	92025-1889	SHIM,T=2.95		AR	AR			
92025T	92025-1890	SHIM,T=3.00		AR	AR			
92025U	92025-1982	SHIM,T=2.425		AR	AR			
92025V	92025-1983	SHIM,T=2.475		AR	AR			
92025W	92025-1984	SHIM,T=2.525		AR	AR			
92025X	92025-1985	SHIM,T=2.575		AR	AR			
92049	92049-1062	SEAL-OIL,RVC2-5.5X8.5X8.3		4	4			
92180	92180-1058	SHIM,T=2.375		AR	AR			
92180A	92180-1059	SHIM,T=2.625		AR	AR			
92180B	92180-1194	SHIM,T=2.675		AR	AR			
92180C	92180-1195	SHIM,T=2.725		AR	AR			
92180D	92180-1196	SHIM,T=2.775		AR	AR			

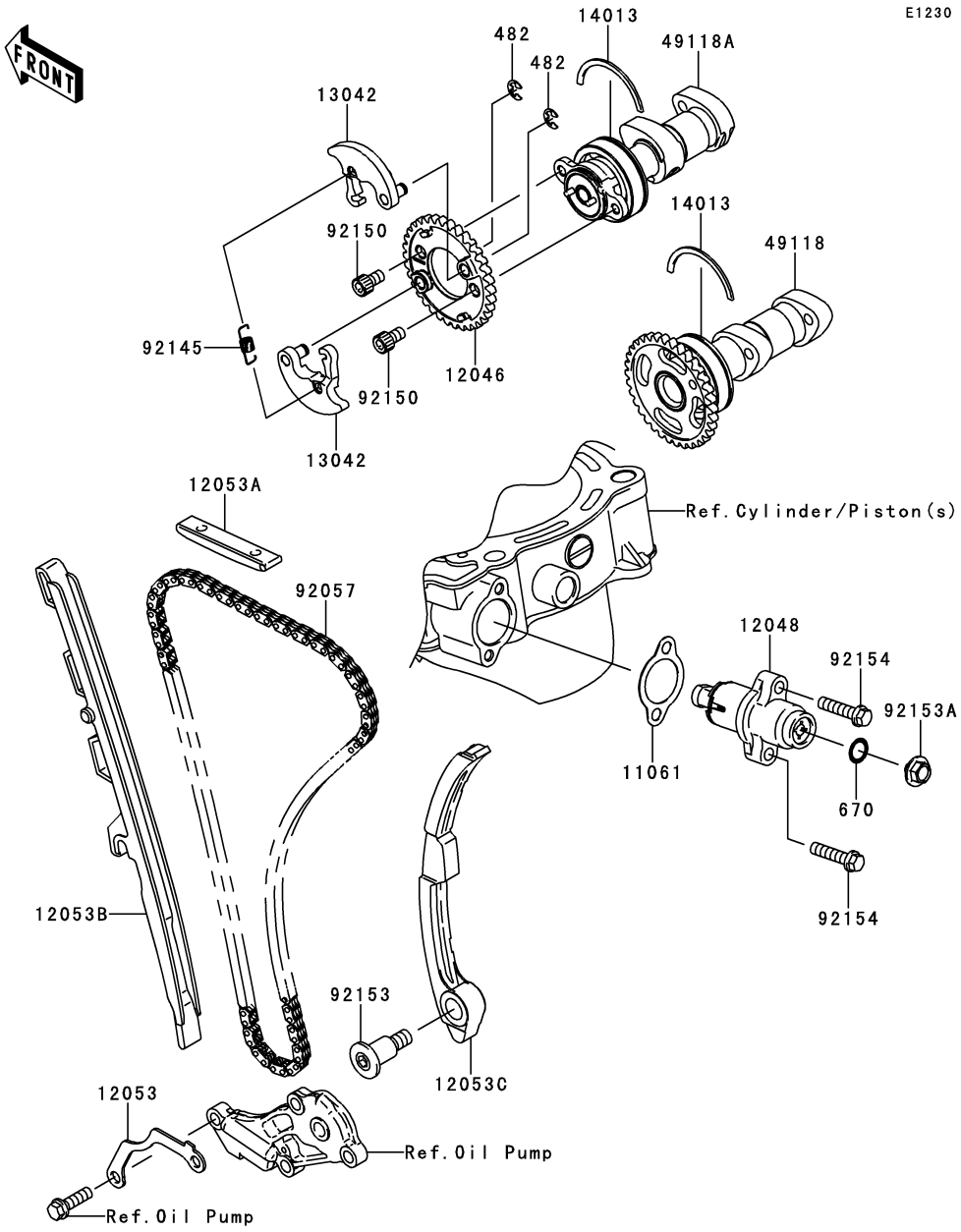

Ref. No.	Part No.	Description	Spec Code	Quantity-KX450 '13 FDF	'14 FEF			
11061	11061-0260	GASKET		1	1			
12046	12046-0071	SPROCKET,34T		1	1			
12048	12048-0021	TENSIONER-ASSY		1	1			
12053	12053-0031	GUIDE-CHAIN,CAM CHAIN STOPPER		1	1			
12053A	12053-0051	GUIDE-CHAIN,UPP		1	1			
12053B	12053-0135	GUIDE-CHAIN,FR		1	1			
12053C	12053-0136	GUIDE-CHAIN,RR		1	1			
13042	13042-0005	WEIGHT		2	2			
14013	14013-0001	RING-POSITION		2	2			
49118	49118-0132	CAMSHAFT-COMP,INTAKE		1	1			
49118A	49118-0133	CAMSHAFT-COMP,EXHAUST		1	1			
92057	92057-0180	CHAIN,CAM,98XRH2010-122M		1	1			
92145	92145-0390	SPRING		1	1			
92150	92150-1650	BOLT,SOCKET,6X10		2	2			
92153	92153-0717	BOLT,8X29.5		1	1			
92153A	92153-1380	BOLT,6X6		1	1			
92154	92154-0520	BOLT,FLANGED,6X25		2	2			
482	482J5000	CIRCLIP-TYPE-E		2	2			
670	670D2010	O RING		1	1			

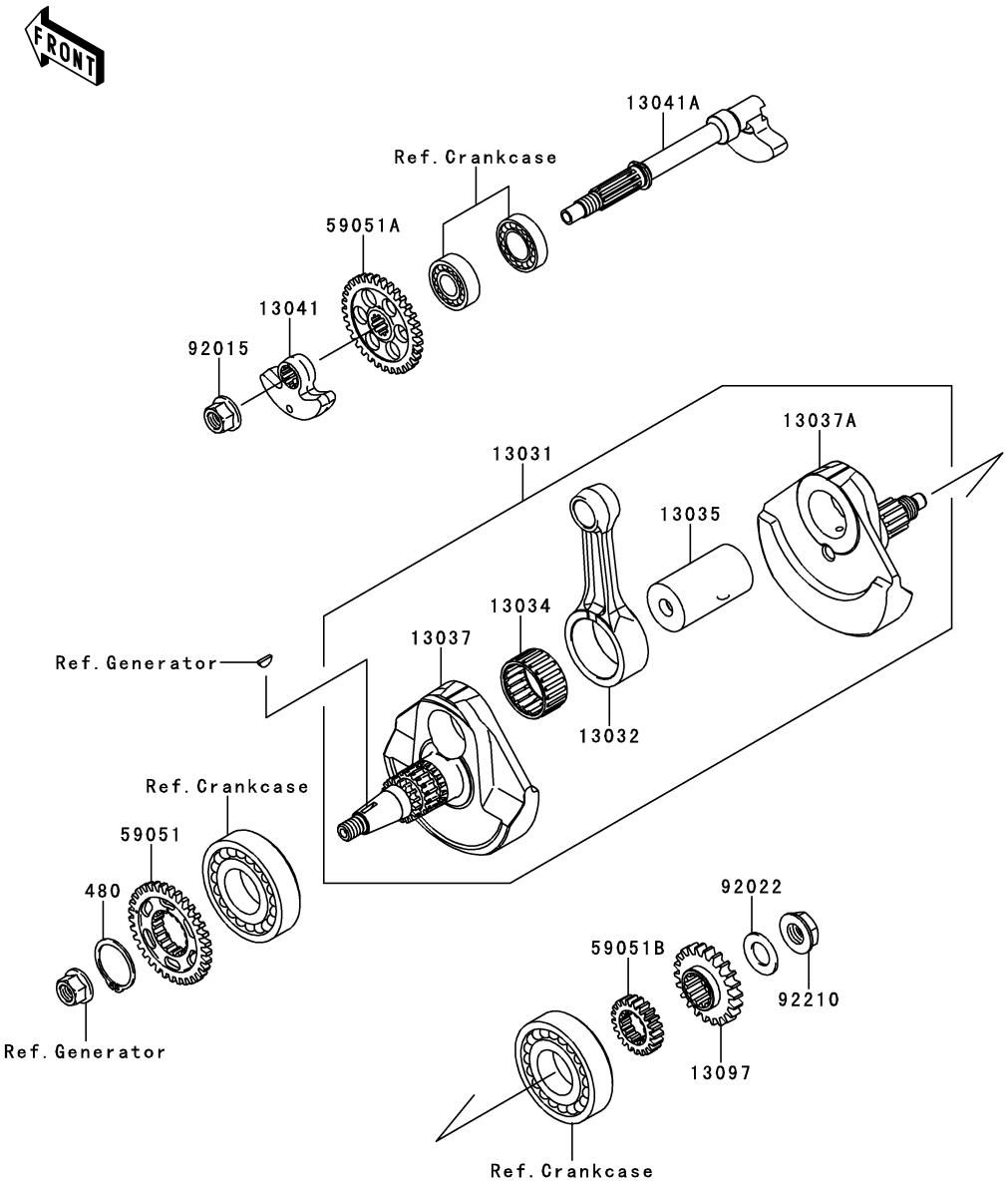

Ref. No.	Part No.	Description	Spec Code	Quantity-KX450 '13 FDF	'14 FEF			
13031	13031-0133	CRANKSHAFT-COMP		1	1			
13032	13032-0067	ROD-CONNECTING,RED		1	1			
13034	13034-0017	BEARING-BIG END,B4(BLUE)		1	1			
13035	13035-0018	PIN-CRANK		1	1			
13037	13037-0159	CRANKSHAFT,LH		1	1			
13037A	13037-0160	CRANKSHAFT,RH		1	1			
13041	13041-0023	BALANCER,WEIGHT		1	1			
13041A	13041-0026	BALANCER,SHAFT		1	1			
13097	13097-0013	GEAR-PRIMARY SPUR,22T		1	1			
59051	59051-0070	GEAR-SPUR,BALANCER DRIVE,33T		1	1			
59051A	59051-0071	GEAR-SPUR,BALANCER DRIVEN,33T		1	1			
59051B	59051-0087	GEAR-SPUR,OIL PUMP DRIVE,21T		1	1			
92015	92015-1426	NUT,12MM		1	1			
92022	92022-1356	WASHER,16.3X29X1.75		1	1			
92210	92210-0490	NUT,16MM		1	1			
480	480J3200	CIRCLIP-TYPE-C,32MM		1	1			

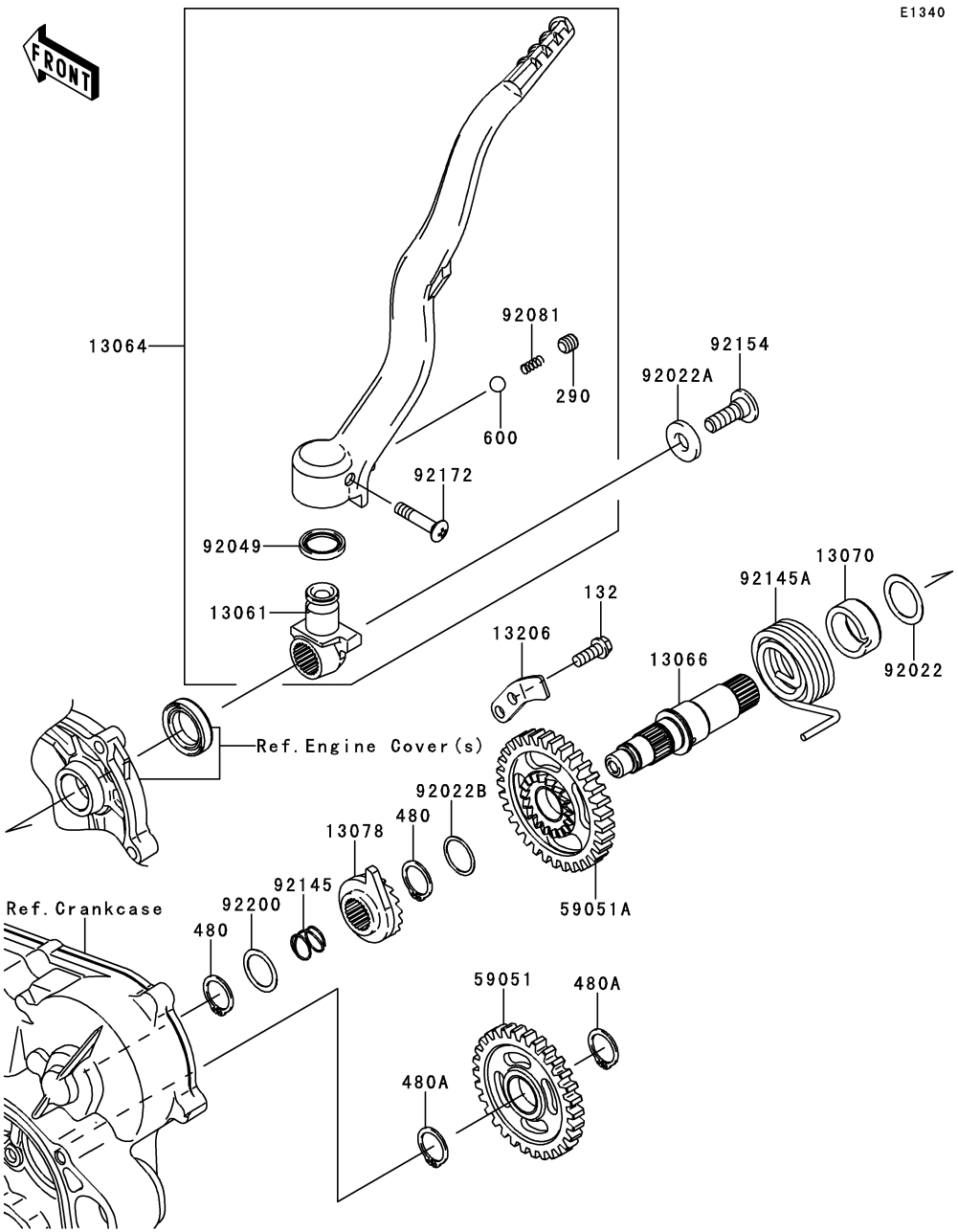

Ref. No.	Part No.	Description	Spec Code	Quantity-KX450 '13 FDF	'14 FEF			
13061	13061-0146	BOSS		1	1			
13064	13064-0051	LEVER-ASSY-KICK		1	1			
13066	13066-0010	SHAFT-KICK		1	1			
13070	13070-1378	GUIDE,KICK SPRING		1	1			
13078	13078-0558	RATCHET		1	1			
13206	13206-0007	GUIDE-KICK		1	1			
59051	59051-0030	GEAR-SPUR,30T		1	1			
59051A	59051-0046	GEAR-SPUR,33T		1	1			
92022	92022-1885	WASHER,20.3X28.0X0.5		1	1			
92022A	92022-1944	WASHER,10X22X3.2		1	1			
92022B	92022-271	WASHER,18.3X22X0.5		1	1			
92049	92049-1387	SEAL-OIL,KICK PEDAL		1	1			
92081	92081-020	SPRING,KICK PEDAL		1	1			
92145	92145-0162	SPRING		1	1			
92145A	92145-0297	SPRING,RETURN		1	1			
92154	92154-0898	BOLT,SOCKET,8X25		1	1			
92172	92172-1088	SCREW,6X30		1	1			
92200	92200-0075	WASHER,18.3X24X0.5		1	1			
132	132BA0616	BOLT-FLANGED-SMALL,6X16		1	1			
290	290CA0808	SCREW-SET-SOCKET,8X8		1	1			
480	480J1800	CIRCLIP-TYPE-C,18MM		2	2			
480A	480J1900	CIRCLIP-TYPE-C,19MM		2	2			
600	600A0800	BALL-STEEL,1/4		1	1			

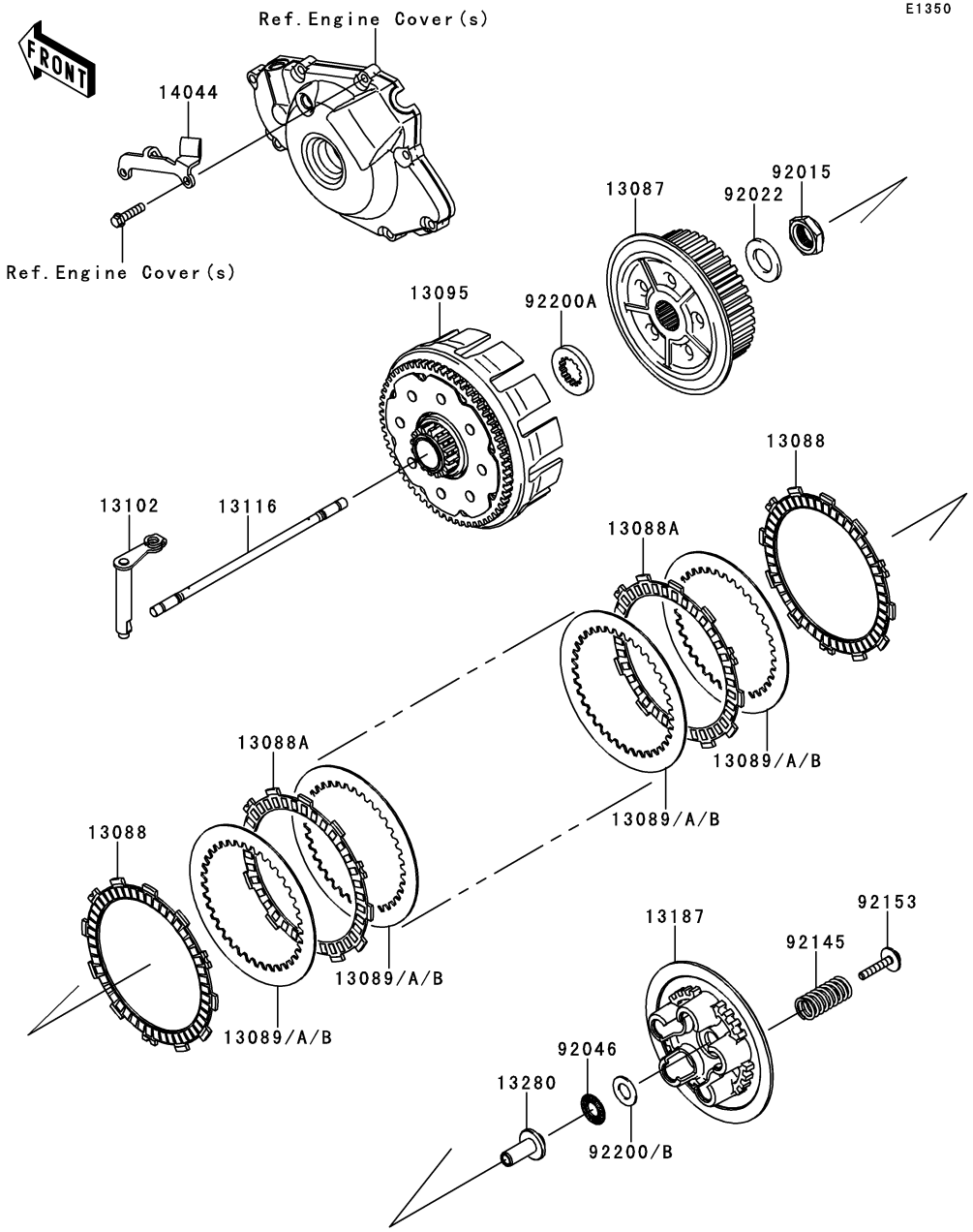

Ref. No.	Part No.	Description	Spec Code	Quantity-KX450 '13 FDF	'14 FEF			
13087	13087-0015	HUB-CLUTCH		1	1			
13088	13088-0010	PLATE-FRICTION		2	2			
13088A	13088-0051	PLATE-FRICTION		6	6			
13089	13089-1005	PLATE-CLUTCH,T=2.0		AR	AR			
13089A	13089-1010	PLATE-CLUTCH,T=1.2		AR	AR			
13089B	13089-1095	PLATE-CLUTCH,T=1.6		7	7			
13095	13095-0122	HOUSING-COMP-CLUTCH		1	1			
13102	13102-0035	RELEASE-COMP-CLUTCH		1	1			
13116	13116-0013	ROD-PUSH		1	1			
13187	13187-0018	PLATE-CLUTCH OPERATING		1	1			
13280	13280-0351	HOLDER		1	1			
14044	14044-0038	HOLDER-CABLE		1	1			
92015	92015-1725	NUT,20MM		1	1			
92022	92022-1868	WASHER,20.3X36X3.7		1	1			
92046	92046-1190	BEARING-NEEDLE,FNTA-1326		1	1			
92145	92145-0862	SPRING,CLUTCH		5	5			
92153	92153-1876	BOLT,WP,6X35		5	5			
92200	92200-0045	WASHER,13.4X25X1.0		AR	AR			
92200A	92200-0245	WASHER,25X41X5.5		1	1			
92200B	92200-1548	WASHER,13.4X25.0X1.5		1	1			

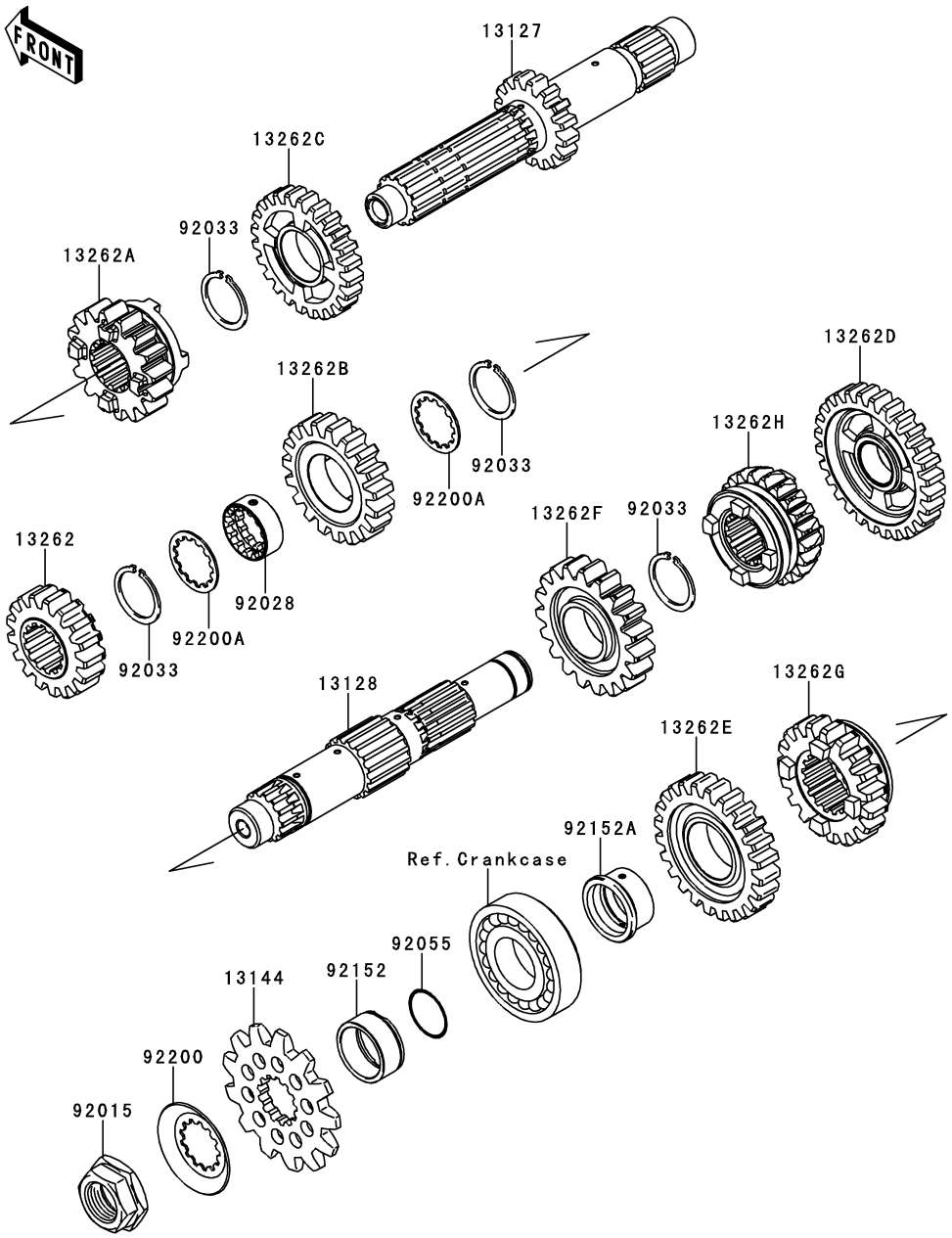

Ref. No.	Part No.	Description	Spec Code	Quantity-KX450 '13 FDF	'14 FEF			
13127	13127-0088	SHAFT-TRANSMISSION INPUT		1	1			
13128	13128-0668	SHAFT-TRANSMISSION OUTPUT		1	1			
13144	13144-0063	SPROCKET-OUTPUT,13T		1	1			
13262	13262-0847	GEAR,INPUT 2ND,17T		1	1			
13262A	13262-0848	GEAR,INPUT 3RD,16T		1	1			
13262B	13262-0849	GEAR,INPUT 4TH,19T		1	1			
13262C	13262-0850	GEAR,INPUT 5TH,24T		1	1			
13262D	13262-0851	GEAR,OUTPUT LOW,28T		1	1			
13262E	13262-0852	GEAR,OUTPUT 2ND,24T		1	1			
13262F	13262-0853	GEAR,OUTPUT 3RD,19T		1	1			
13262G	13262-0854	GEAR,OUTPUT 4TH,19T		1	1			
13262H	13262-0855	GEAR,OUTPUT 5TH,21T		1	1			
92015	92015-1963	NUT,20MM		1	1			
92028	92028-1857	BUSHING,INPUT TOP GEAR		1	1			
92033	92033-1172	RING-SNAP,25MM		4	4			
92055	92055-1293	RING-O,21.5X1.5		1	1			
92152	92152-0150	COLLAR,25X30X13.2		1	1			
92152A	92152-0540	COLLAR		1	1			
92200	92200-0390	WASHER		1	1			
92200A	92200-1389	WASHER		2	2			

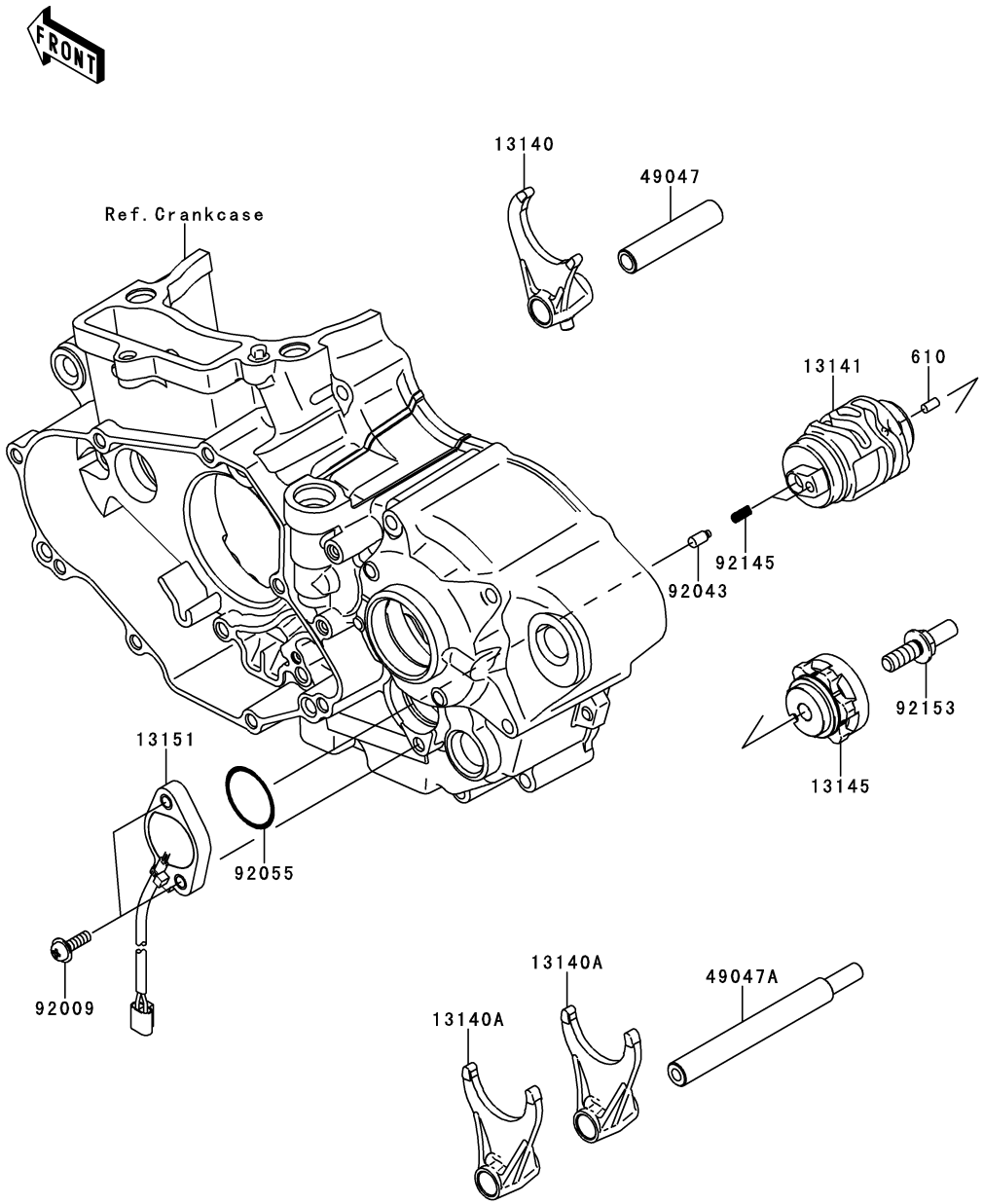

Ref. No.	Part No.	Description	Spec Code	Quantity-KX450 '13 FDF	'14 FEF			
13140	13140-0043	FORK-SHIFT,IN		1	1			
13140A	13140-0044	FORK-SHIFT,OUT		2	2			
13141	13141-0064	DRUM-CHANGE		1	1			
13145	13145-0031	CAM-CHANGE DRUM		1	1			
13151	13151-0047	SWITCH-COMP,NEUTRAL		1	1			
49047	49047-0017	ROD-SHIFT,IN		1	1			
49047A	49047-0028	ROD-SHIFT,OUT		1	1			
92009	92009-1571	SCREW,5X16		2	2			
92043	92043-1654	PIN		2	2			
92055	92055-091	RING-O,27.7X2.4		1	1			
92145	92145-1414	SPRING		2	2			
92153	92153-0530	BOLT,8X20		1	1			
610	610A0408	ROLLER,4X8		1	1			

Gear Change Mechanism

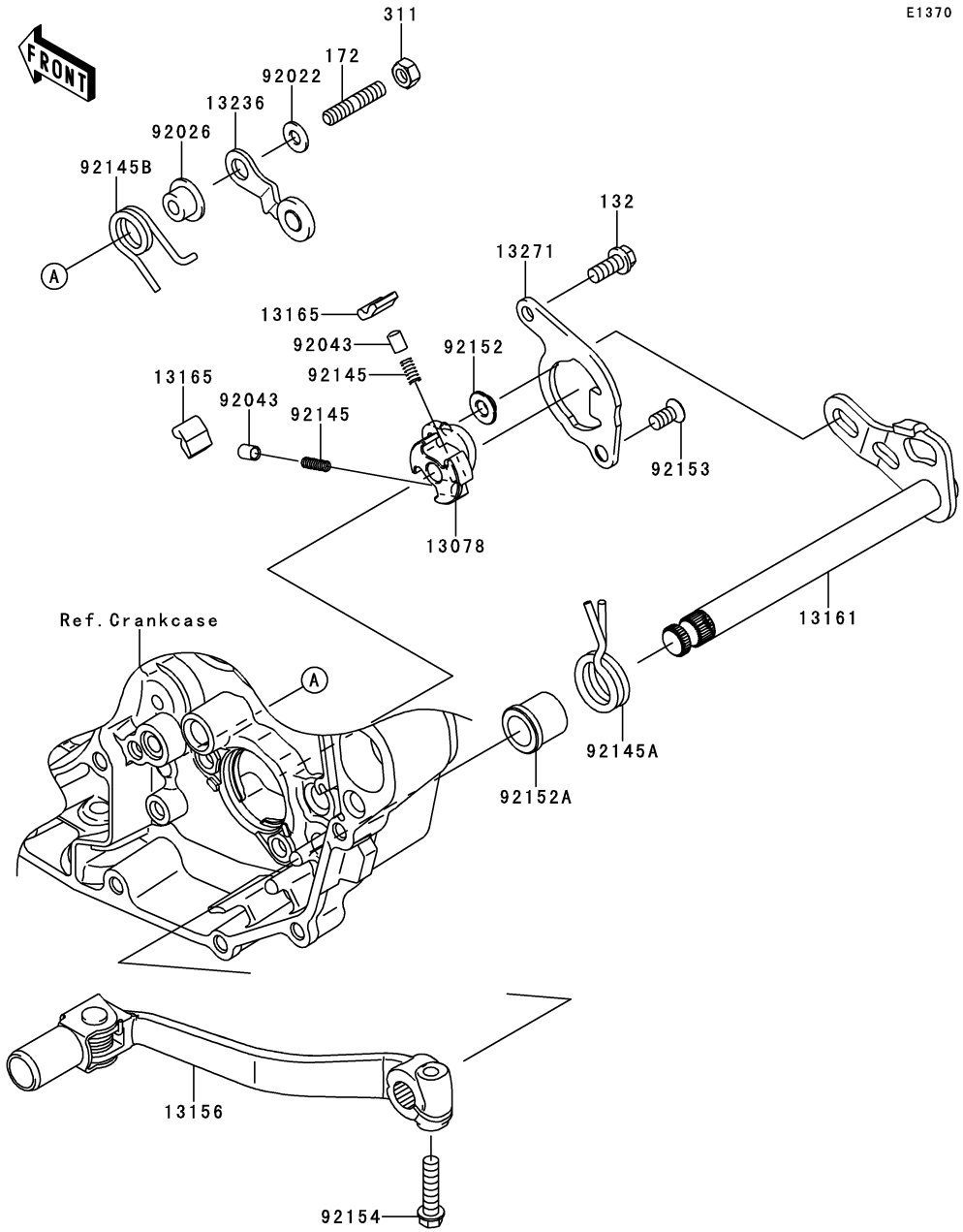

Ref. No.	Part No.	Description	Spec Code	Quantity-KX450 '13 FDF	'14 FEF			
13078	13078-0012	RATCHET		1	1			
13156	13156-0156	LEVER-CHANGE		1	1			
13161	13161-0081	LEVER-COMP-CHANGE SHAFT		1	1			
13165	13165-0018	PAWL		2	2			
13236	13236-0190	LEVER-COMP,POSITION		1	1			
13271	13271-0893	PLATE,PAWL GUIDE		1	1			
92022	92022-1827	WASHER,6X12.8X1.2		1	1			
92026	92026-0156	SPACER		1	1			
92043	92043-1676	PIN,PLUNGER		2	2			
92145	92145-0453	SPRING		2	2			
92145A	92145-0496	SPRING,RETURN		1	1			
92145B	92145-0680	SPRING		1	1			
92152	92152-1414	COLLAR		1	1			
92152A	92152-1419	COLLAR,RETURN SPRING		1	1			
92153	92153-1669	BOLT,TORX,6X8.7		1	1			
92154	92154-0520	BOLT,FLANGED,6X25		1	1			
132	132BA0614	BOLT-FLANGED-SMALL,6X14		1	1			
172	172BA0618	BOLT-STUD,6X18		1	1			
311	311BA0600	NUT-HEX		1	1			

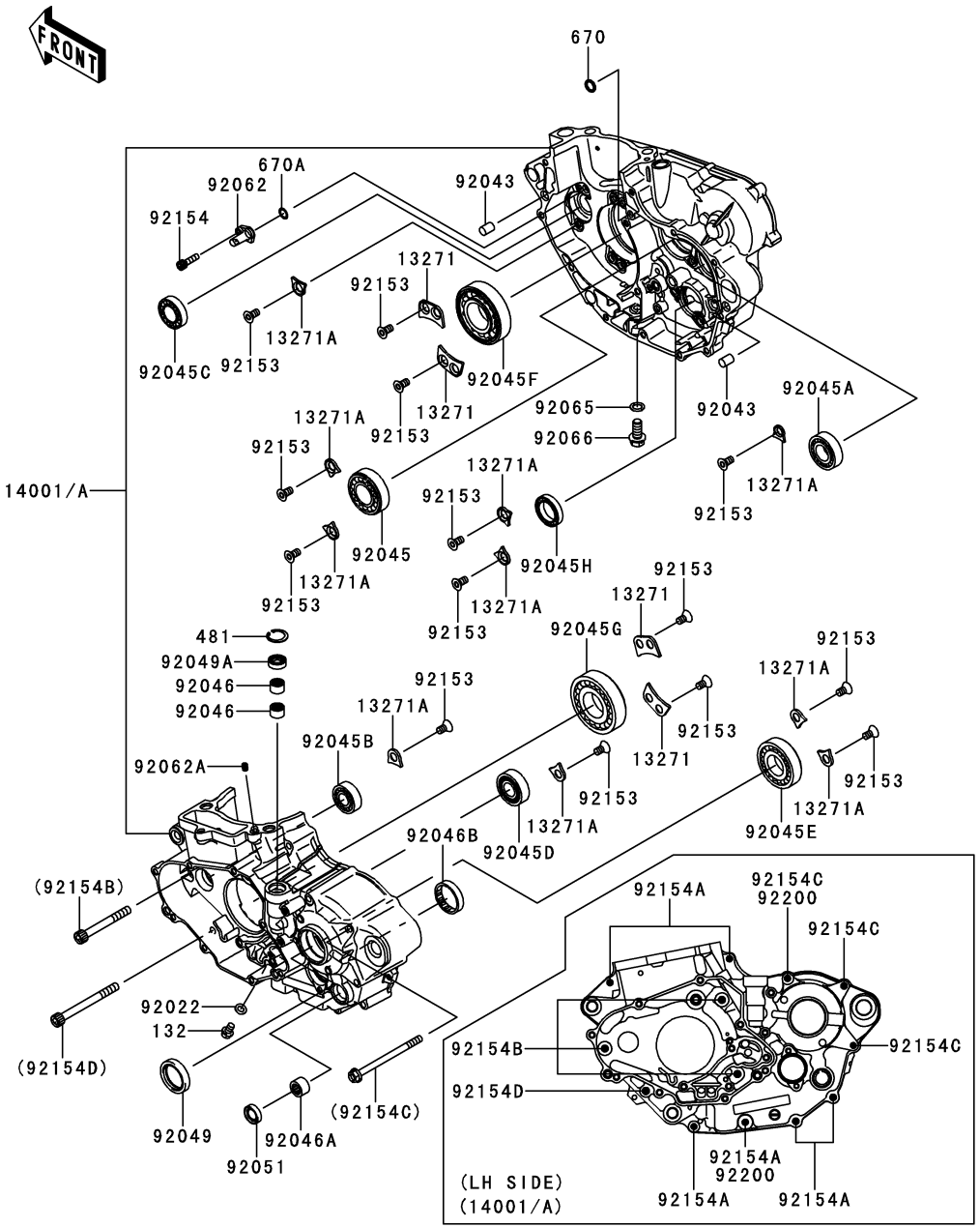

Ref. No.	Part No.	Description	Spec Code	Quantity-KX450 '13 FDF	'14 FEF			
13271	13271-0334	PLATE		4	4			
13271A	13271-0345	PLATE		10	10			
14001	14001-0162	SET-CRANKCASE		1				
14001A	14001-0601	SET-CRANKCASE			1			
92022	92022-304	WASHER,6.2X11X1		1	1			
92043	92043-1506	PIN,10X14		2	2			
92045	92045-0035	BEARING-BALL,25X52X15		1	1			
92045A	92045-0036	BEARING-BALL,20X42X12		1	1			
92045B	92045-0037	BEARING-BALL,6202SH2C3		1	1			
92045C	92045-0038	BEARING-BALL,6904C3UR5		1	1			
92045D	92045-0057	BEARING-BALL,3TM-5X0391LUC3		1	1			
92045E	92045-0062	BEARING-BALL		1	1			
92045F	92045-0074	BEARING-BALL,B32-32-A-ZEC4		1	1			
92045G	92045-0132	BEARING-BALL		1	1			
92045H	92045-1432	BEARING-BALL,6805JRZ		1	1			
92046	92046-0034	BEARING-NEEDLE,HK1210FM		2	2			
92046A	92046-1148	BEARING-NEEDLE,HK1312		1	1			
92046B	92046-1221	BEARING-NEEDLE,7E-HKS33X38X8		1	1			
92049	92049-0030	SEAL-OIL,TC 30 40 7		1	1			
92049A	92049-1475	SEAL-OIL,CLUTCH RELEASE		1	1			
92051	92051-005	SEAL-OIL,TB13225.5		1	1			
92062	92062-0017	NOZZLE		1	1			
92062A	92062-1081	NOZZLE,6X8,SILVER		1	1			
92065	92065-058	GASKET,10.5X16X1		1	1			
92066	92066-0038	PLUG,DRAIN,10X22		1	1			
92153	92153-1669	BOLT,TORX,6X8.7		18	18			
92154	92154-0038	BOLT,SOCKET,5X18		1	1			
92154A	92154-0526	BOLT,FLANGED,6X50		6	6			
92154B	92154-0527	BOLT,SOCKET,7X60		3	3			
92154C	92154-0528	BOLT,FLANGED,6X85		3	3			
92154D	92154-0529	BOLT,SOCKET,7X75		1	1			
92200	92200-0171	WASHER,6.3X13.5X1.0		2	2			
132	132BA0608	BOLT-FLANGED-SMALL,6X8		1	1			
481	481J2100	CIRCLIP		1	1			
670	670D1507	O RING,7MM		1	1			
670A	670D1508	O RING,8MM		1	1			

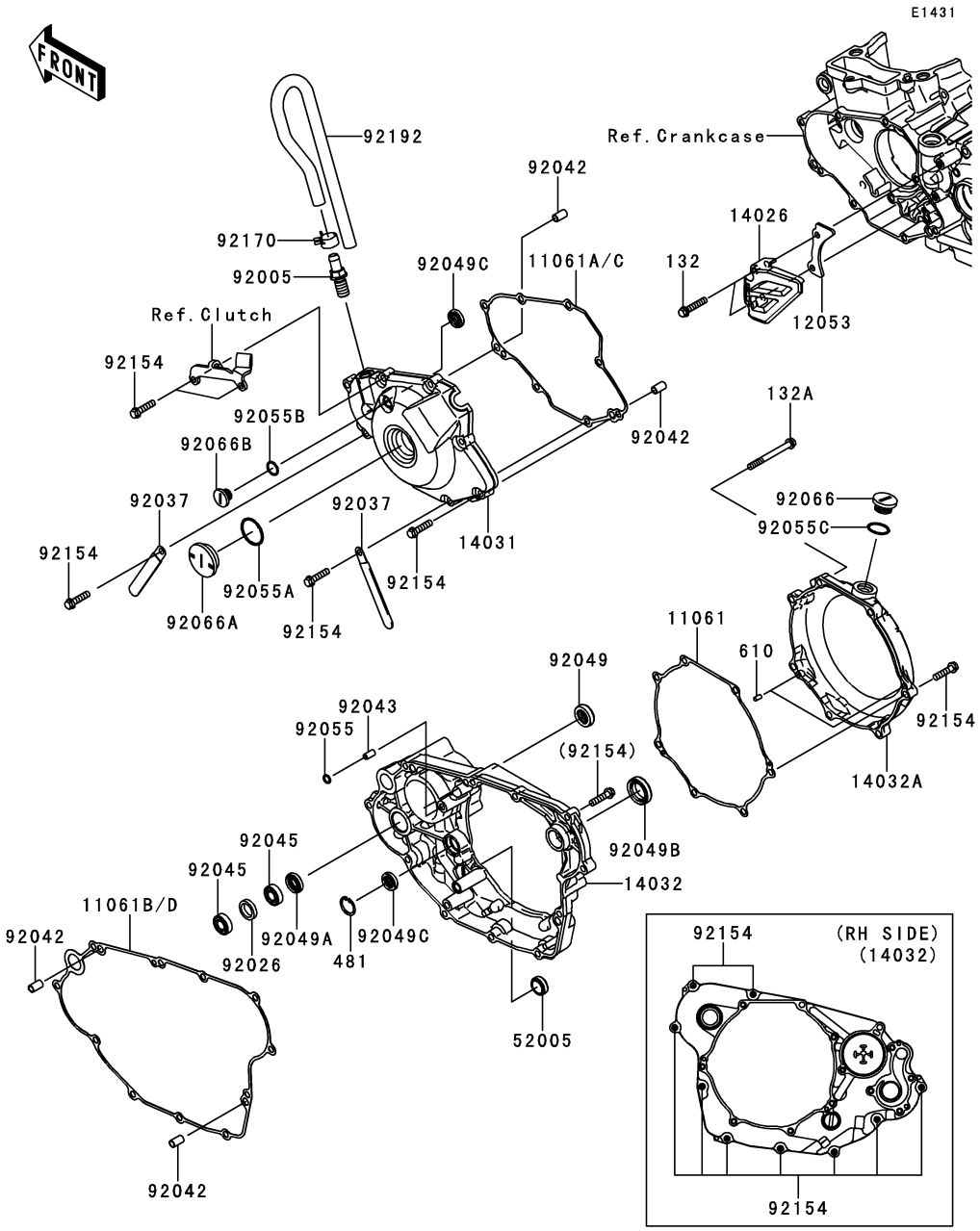

Ref. No.	Part No.	Description	Spec Code	Quantity-KX450 '13 FDF	'14 FEF			
11061	11061-0259	GASKET,CLUTCH OUTER COVER		1	1			
11061A	11061-0452 (OPTION)	GASKET,GENERATOR COVER		1	1			
11061B	11061-0453 (OPTION)	GASKET,CLUTCH COVER		1	1			
11061C	11061-0852	GASKET,GENERATOR COVER		1	1			
11061D	11061-0853	GASKET,CLUTCH COVER		1	1			
12053	12053-0187	GUIDE-CHAIN		1	1			
14026	14026-0065	COVER-CHAIN		1	1			
14031	14031-0567	COVER-GENERATOR		1	1			
14032	14032-0117	COVER-CLUTCH,INNER		1	1			
14032A	14032-0571	COVER-CLUTCH		1	1			
52005	52005-0019	GAUGE,OIL LEVEL		1	1			
92005	92005-0014	FITTING,BREATHER		1	1			
92026	92026-0064	SPACER,16X22X4.3		1	1			
92037	92037-1993	CLAMP		2	2			
92042	92042-007	PIN,DOWEL,6.3X8X14		4	4			
92043	92043-1262	PIN,4.2X6X12		1	1			
92045	92045-0039	BEARING-BALL,6900C3		2	2			
92049	92049-0040	SEAL-OIL,12X24X7		1	1			
92049A	92049-0041	SEAL-OIL,12X22X5		1	1			
92049B	92049-0134	SEAL-OIL,20X30X7		1	1			
92049C	92049-1542	SEAL-OIL,10X20X5		2	2			
92055	92055-0113	RING-O		1	1			
92055A	92055-091	RING-O,27.7X2.4		1	1			
92055B	92055-1011	RING-O,13.0X1.9		1	1			
92055C	92055-1146	RING-O,20X2		1	1			
92066	92066-0757	PLUG,18X9		1	1			
92066A	92066-0758	PLUG,30X8		1	1			
92066B	92066-0759	PLUG,12X9.1		1	1			
92154	92154-0530	BOLT,FLANGED,6X25		23	23			
92170	92170-1938	CLAMP		1	1			
92192	92192-0944	TUBE,BREATHER		1	1			
132	132BA0630	BOLT-FLANGED-SMALL,6X30		2	2			
132A	132BA0660	BOLT-FLANGED-SMALL,6X60		1	1			
481	481J2000	CIRCLIP-TYPE-C,20MM		1	1			
610	610A0408	ROLLER,4X8		2	2			

E1510

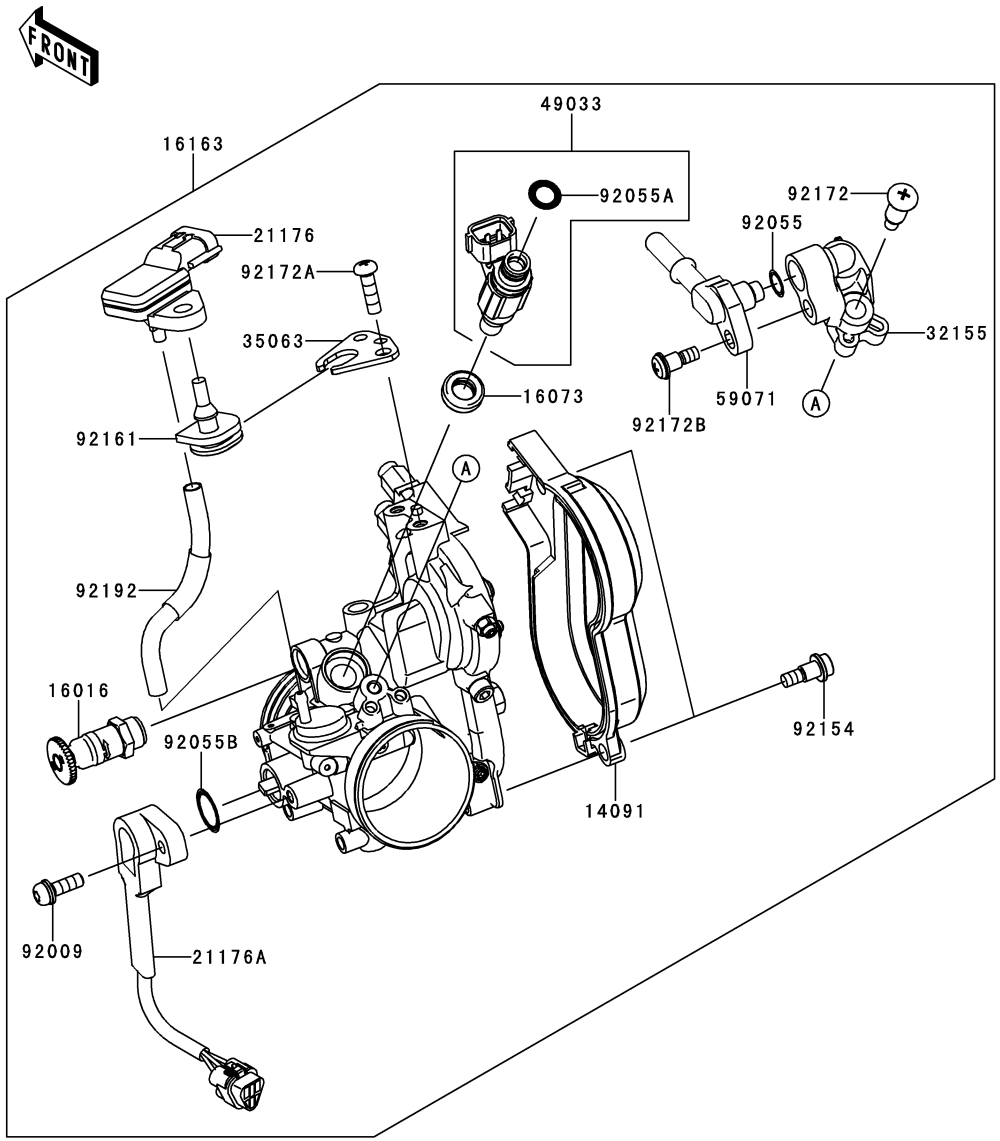

Ref. No.	Part No.	Description	Spec Code	Quantity-KX450 '13 FDF	'14 FEF			
14091	14091-1815	COVER,THROTTLE DUST		1	1			
16016	16016-0023	PLUNGER		1	1			
16073	16073-3707	INSULATOR		1	1			
16163	16163-0734	THROTTLE-ASSY		1	1			
21176	21176-0058	SENSOR,PRESSURE		1	1			
21176A	21176-0129	SENSOR,THROTTLE POSITION		1	1			
32155	32155-0112	PIPE,FUEL		1	1			
35063	35063-0647	STAY		1	1			
49033	49033-0010	NOZZLE-INJECTION		1	1			
59071	59071-0071	JOINT		1	1			
92009	92009-1981	SCREW,THROTTLE SENSOR		1	1			
92055	92055-0064	RING-O		1	1			
92055A	92055-1622	RING-O,INJECTION NOZZLE		1	1			
92055B	92055-1671	RING-O		1	1			
92154	92154-0243	BOLT		2	2			
92161	92161-0041	DAMPER		1	1			
92172	92172-0064	SCREW,PIPE INJECTION		1	1			
92172A	92172-0438	SCREW		2	2			
92172B	92172-0776	SCREW		1	1			
92192	92192-0823	TUBE		1	1			

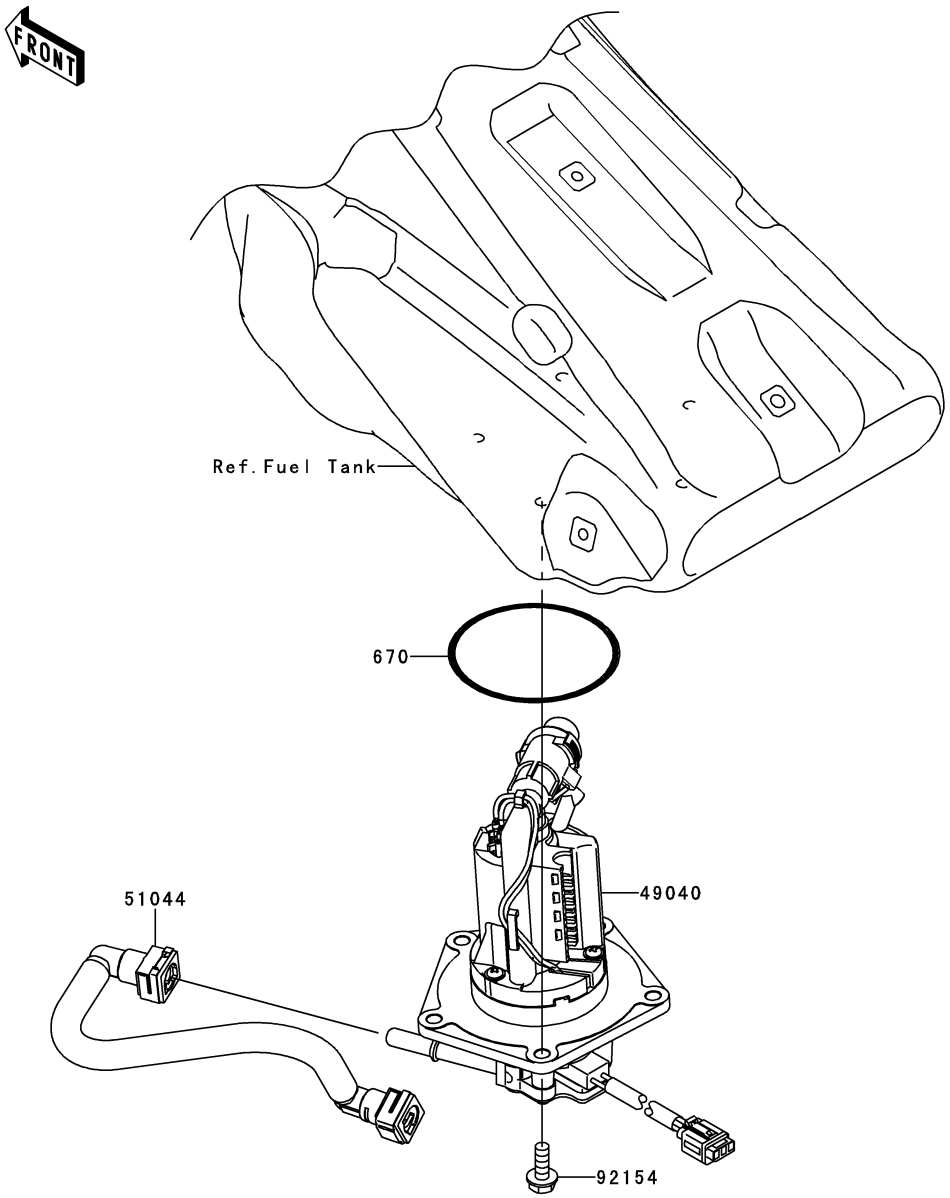

Ref. No.	Part No.	Description	Spec Code	Quantity-KX450 '13 FDF	'14 FEF			
49040	49040-0711	PUMP-FUEL		1	1			
51044	51044-0116	TUBE-ASSY,FUEL		1	1			
92154	92154-0899	BOLT,FLANGED,6X16		5	5			
670	670E5070	O RING		1	1			

E1530

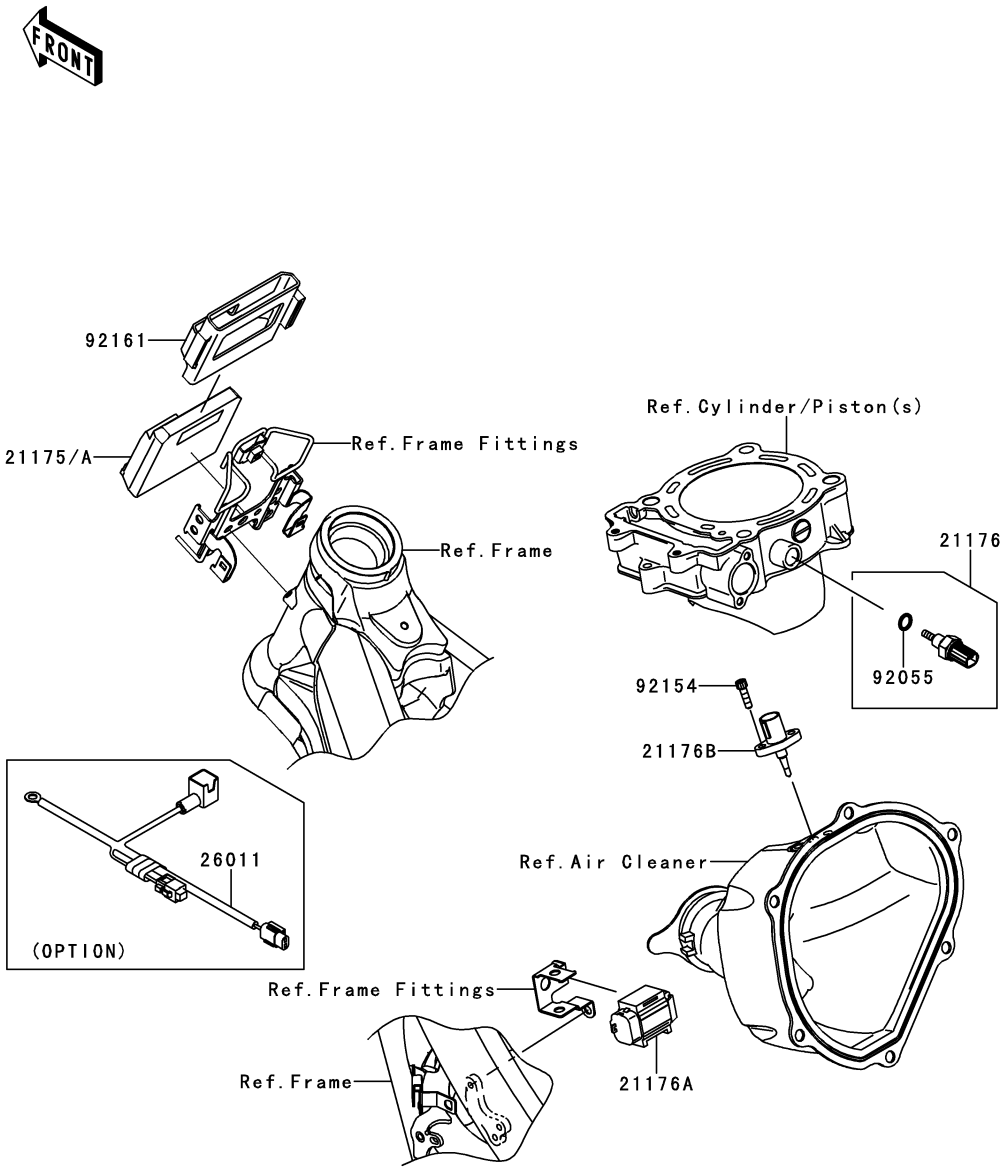

Ref. No.	Part No.	Description	Spec Code	Quantity-KX450 '13 FDF	'14 FEF			
21175	21175-0802	CONTROL UNIT-ELECTRONIC		1				
21175A	21175-0883	CONTROL UNIT-ELECTRONIC			1			
21176	21176-0009	SENSOR,WATER TEMP		1	1			
21176A	21176-0066	SENSOR,VEHICLE-DOWN		1	1			
21176B	21176-0121	SENSOR,AIR TEMP		1	1			
26011	26011-0246 (OPTION)	WIRE-LEAD,BAT. CONNECTION		1	1			
92055	92055-0016	RING-O,9.5X1.9		1	1			
92154	92154-0038	BOLT,SOCKET,5X18		2	2			
92161	92161-0842	DAMPER,ECU		1	1			

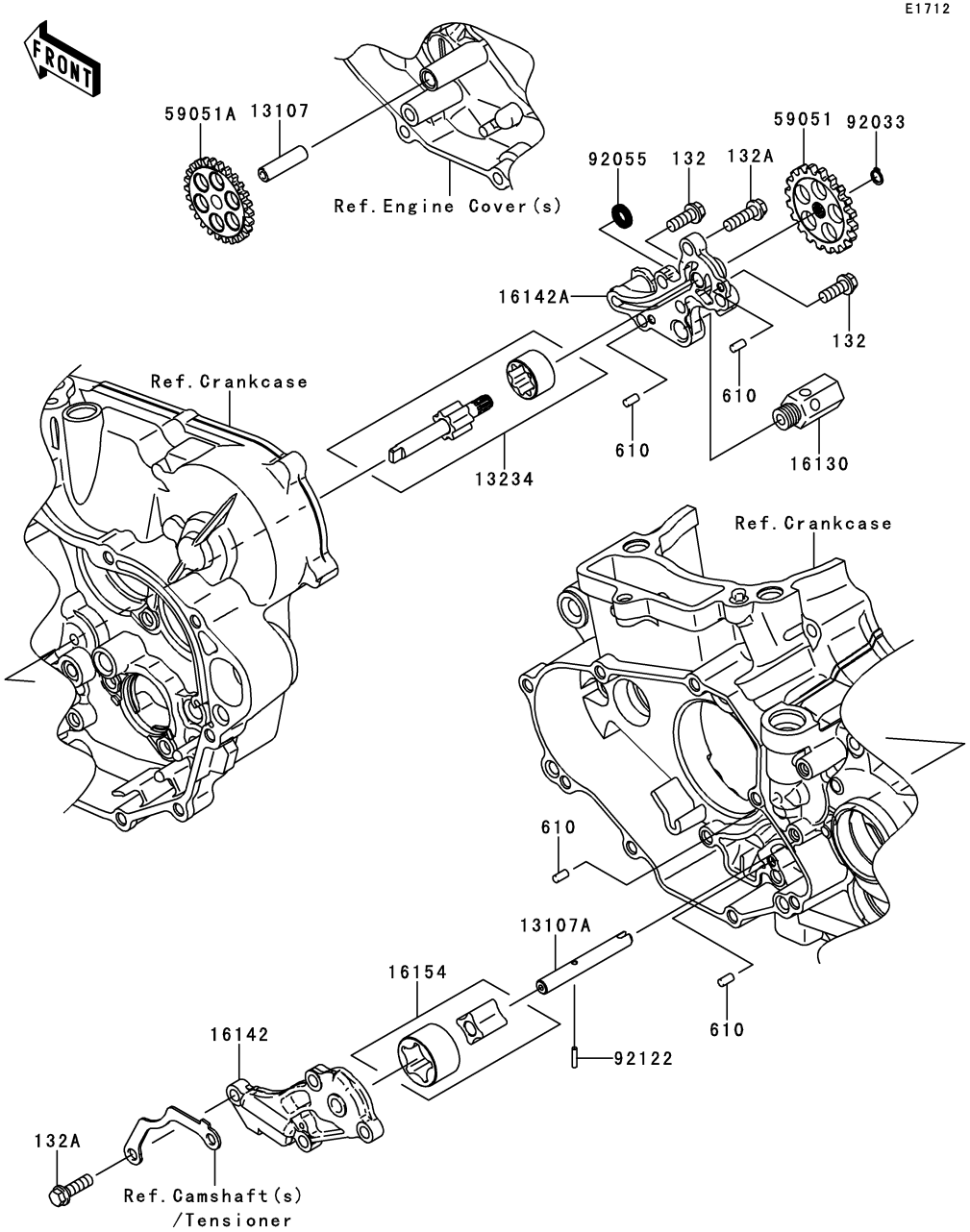

Ref. No.	Part No.	Description	Spec Code	Quantity-KX450 '13 FDF	'14 FEF			
13107	13107-0056	SHAFT		1	1			
13107A	13107-0134	SHAFT,OIL PUMP,SCAVENGE		1	1			
13234	13234-0036	SHAFT-COMP,FEED		1	1			
16130	16130-1058	VALVE-ASSY-RELIEF		1	1			
16142	16142-0042	COVER-PUMP,OIL,LH		1	1			
16142A	16142-0062	COVER-PUMP,OIL,RH		1	1			
16154	16154-0069	ROTOR-PUMP,SCAVENGE		1	1			
59051	59051-0044	GEAR-SPUR,O/P DRIVEN,28T		1	1			
59051A	59051-0045	GEAR-SPUR,O/P IDLER,26T		1	1			
92033	92033-0019	RING-SNAP		1	1			
92055	92055-074	RING-O,OD=13		1	1			
92122	92122-0021	ROLLER,2.5X11.8		1	1			
132	132BA0616	BOLT-FLANGED-SMALL,6X16		2	2			
132A	132BA0620	BOLT-FLANGED-SMALL,6X20		7	7			
610	610A0408	ROLLER,4X8		4	4			

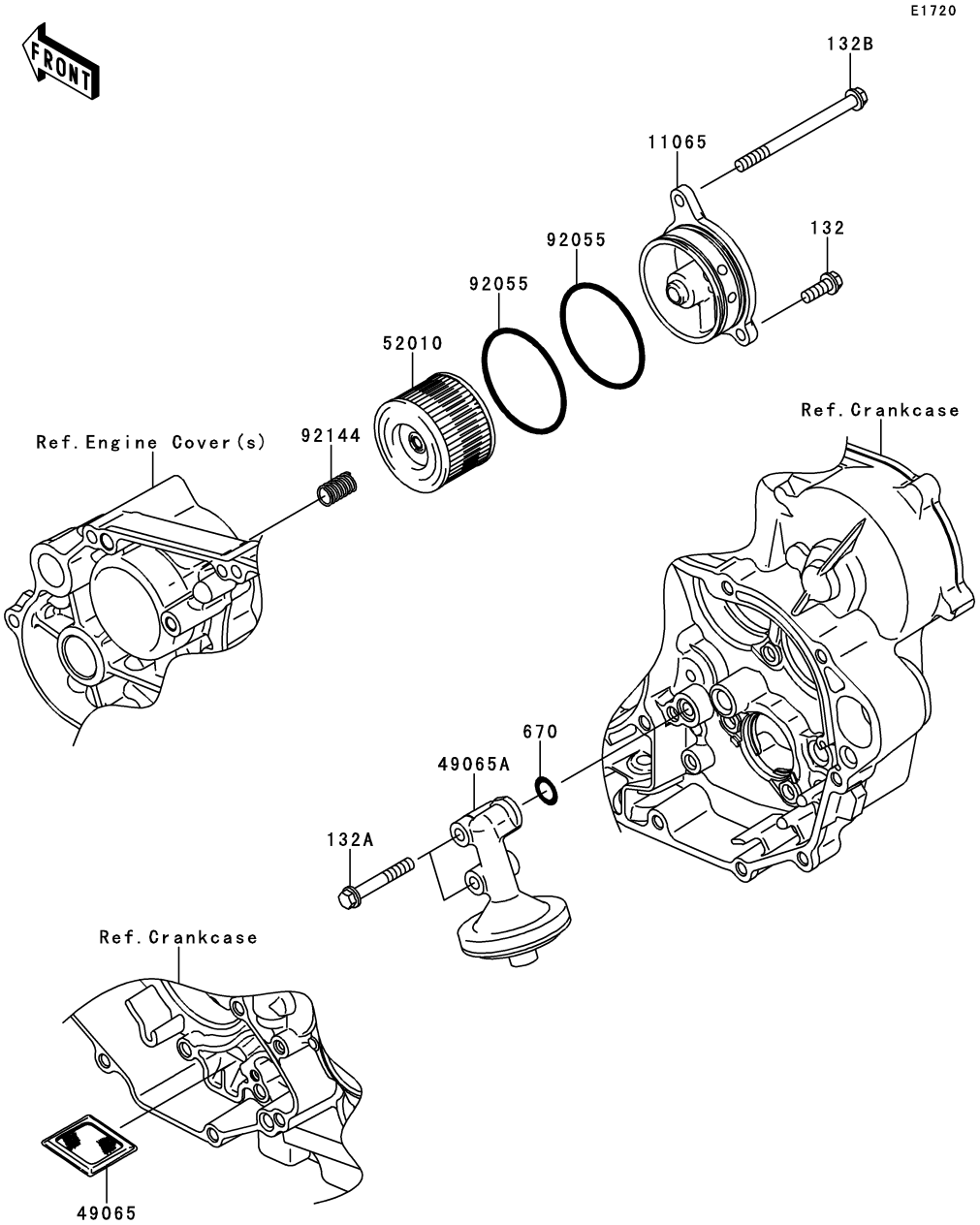

Ref. No.	Part No.	Description	Spec Code	Quantity-KX450 '13 FDF	'14 FEF			
11065	11065-0107	CAP,OIL FILTER		1	1			
49065	49065-0019	FILTER-OIL,STRAINER		1	1			
49065A	49065-0022	FILTER-OIL		1	1			
52010	52010-1053	ELEMENT-OIL FILTER		1	1			
92055	92055-1577	RING-O,52.6X2.4		2	2			
92144	92144-1761	SPRING		1	1			
132	132BA0616	BOLT-FLANGED-SMALL,6X16		1	1			
132A	132BA0640	BOLT-FLANGED-SMALL,6X40		2	2			
132B	132BA0680	BOLT-FLANGED-SMALL,6X80		1	1			
670	670D2010	O RING		1	1			

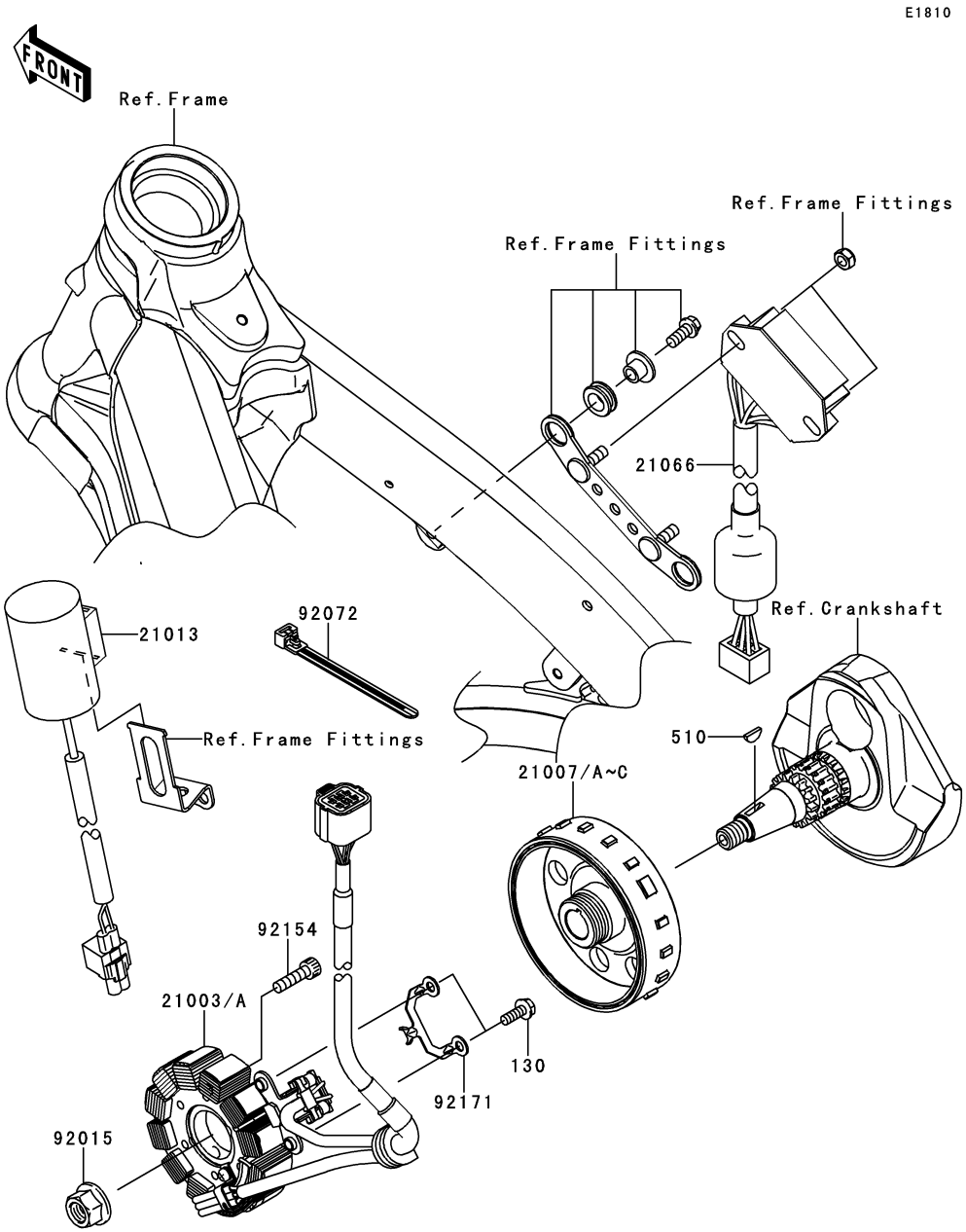

Ref. No.	Part No.	Description	Spec Code	Quantity-KX450 '13 FDF	'14 FEF			
21003	21003-0082	STATOR		1				
21003A	21003-0148	STATOR			1			
21007	21007-0122	ROTOR,I=9.0		1				
21007A	21007-0138 (OPTION)	ROTOR,I=8.5		1	1			
21007B	21007-0139 (OPTION)	ROTOR,I=9.5		1	1			
21007C	21007-0594	ROTOR,I=9.0			1			
21013	21013-0001	CONDENSER		1	1			
21066	21066-0721	REGULATOR-VOLTAGE		1	1			
92015	92015-1426	NUT,12MM		1	1			
92072	92072-0055	BAND,L=100		1	1			
92154	92154-0031	BOLT,SOCKET,6X22		3	3			
92171	92171-1843	CLAMP		1	1			
130	130BA0514	BOLT-FLANGED,5X14		2	2			
510	510A3200	KEY-WOODRUFF		1	1			

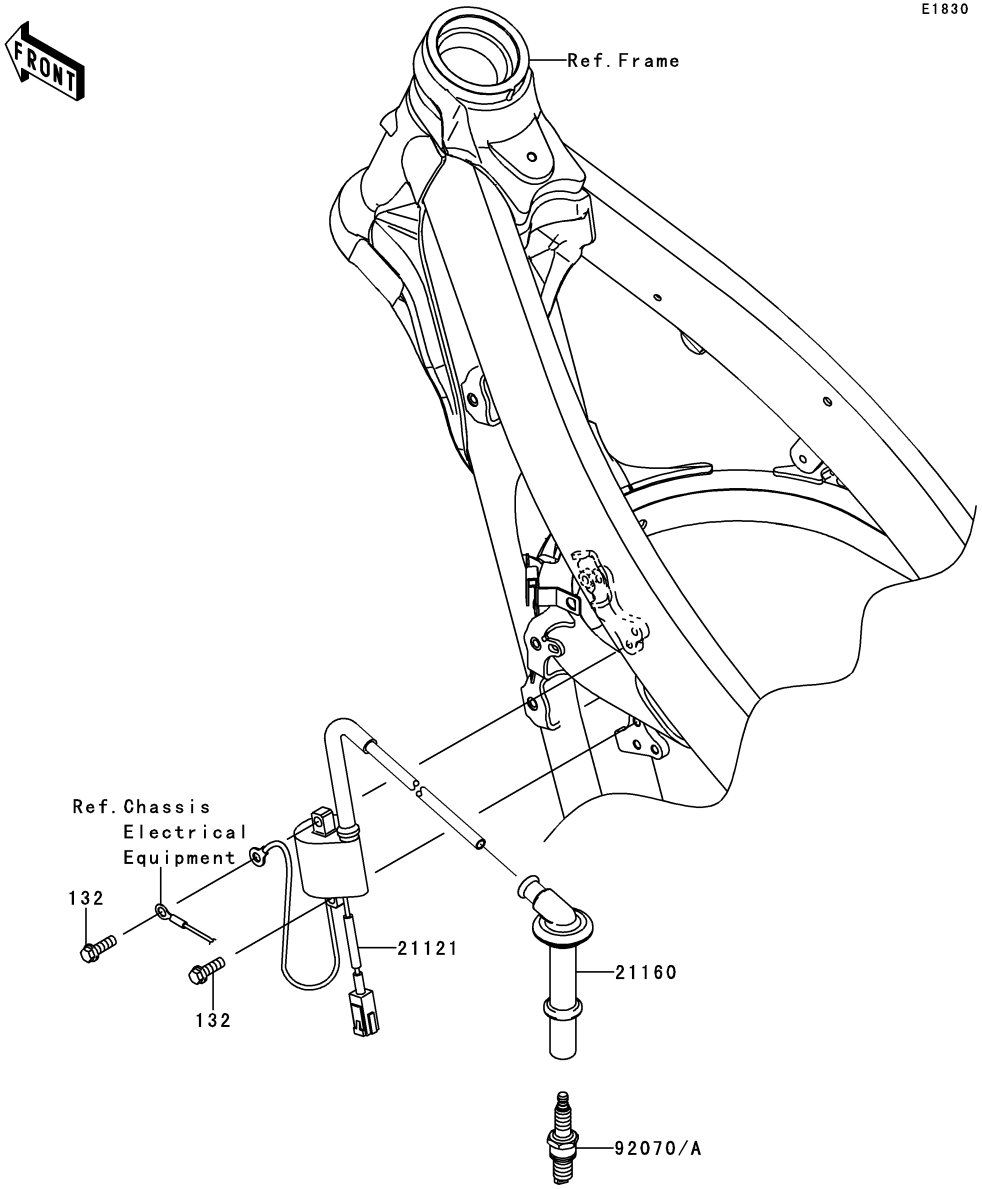

Ref. No.	Part No.	Description	Spec Code	Quantity-KX450 '13 FDF	'14 FEF			
21121	21121-0707	COIL-IGNITION		1	1			
21160	21160-0014	CAP-ASSY-PLUG		1	1			
92070	92070-0020	PLUG-SPARK,CPR8EB-9(NGK)		1	1			
92070A	92070-0021 (OPTION)	PLUG-SPARK,CPR9EB-9(NGK)		1	1			
132	132BA0618	BOLT-FLANGED-SMALL,6X18		2	2			

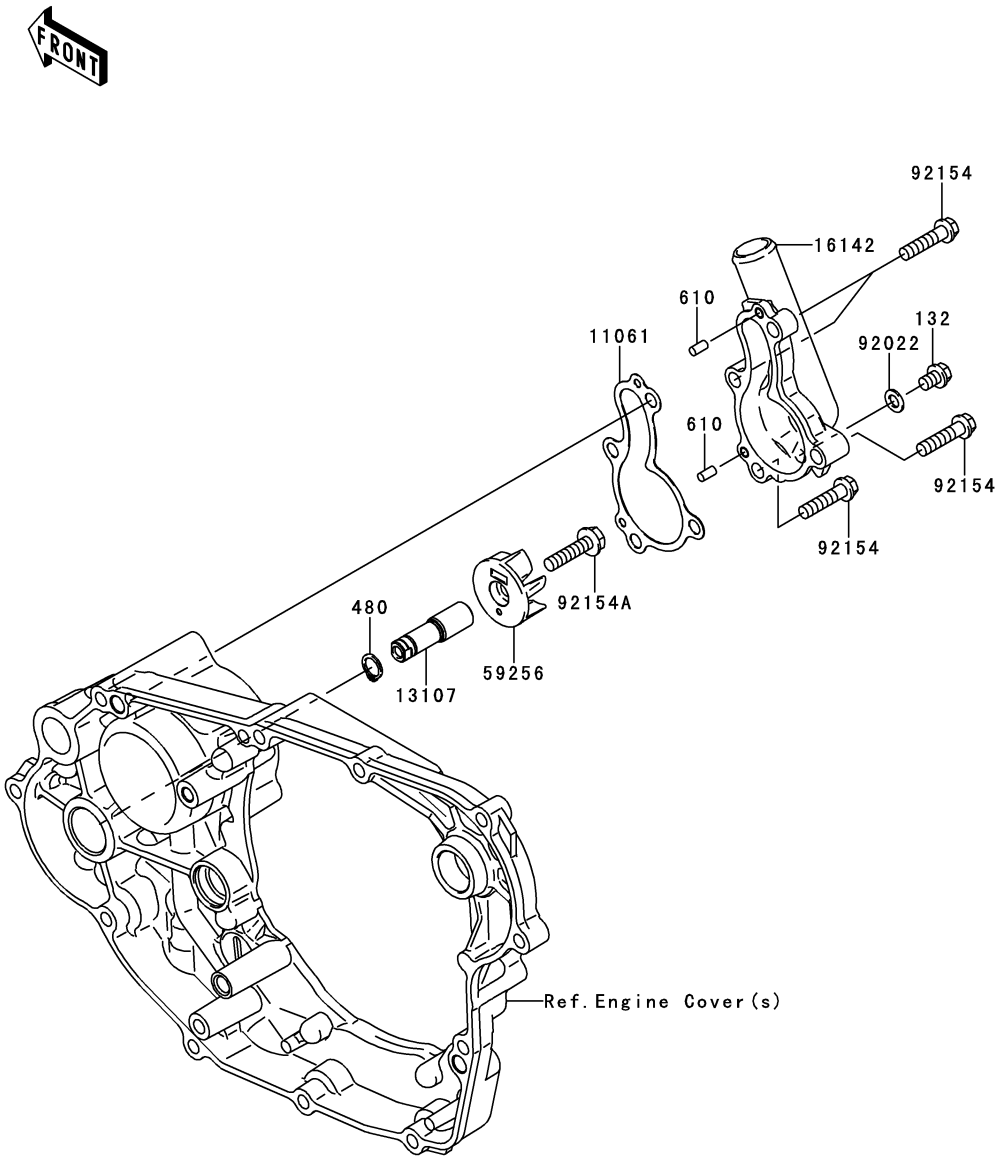

Ref. No.	Part No.	Description	Spec Code	Quantity-KX450 '13 FDF	'14 FEF			
11061	11061-0225	GASKET,WATER PUMP COVER		1	1			
13107	13107-0135	SHAFT,WATER PUMP		1	1			
16142	16142-0029	COVER-PUMP,WATER		1	1			
59256	59256-0003	IMPELLER		1	1			
92022	92022-304	WASHER,6.2X11X1		1	1			
92154	92154-0530	BOLT,FLANGED,6X25		4	4			
92154A	92154-0531	BOLT,FLANGED,6X25		1	1			
132	132BA0608	BOLT-FLANGED-SMALL,6X8		1	1			
480	480J1000	CIRCLIP-TYPE-C,10MM		1	1			
610	610A0408	ROLLER,4X8		2	2			

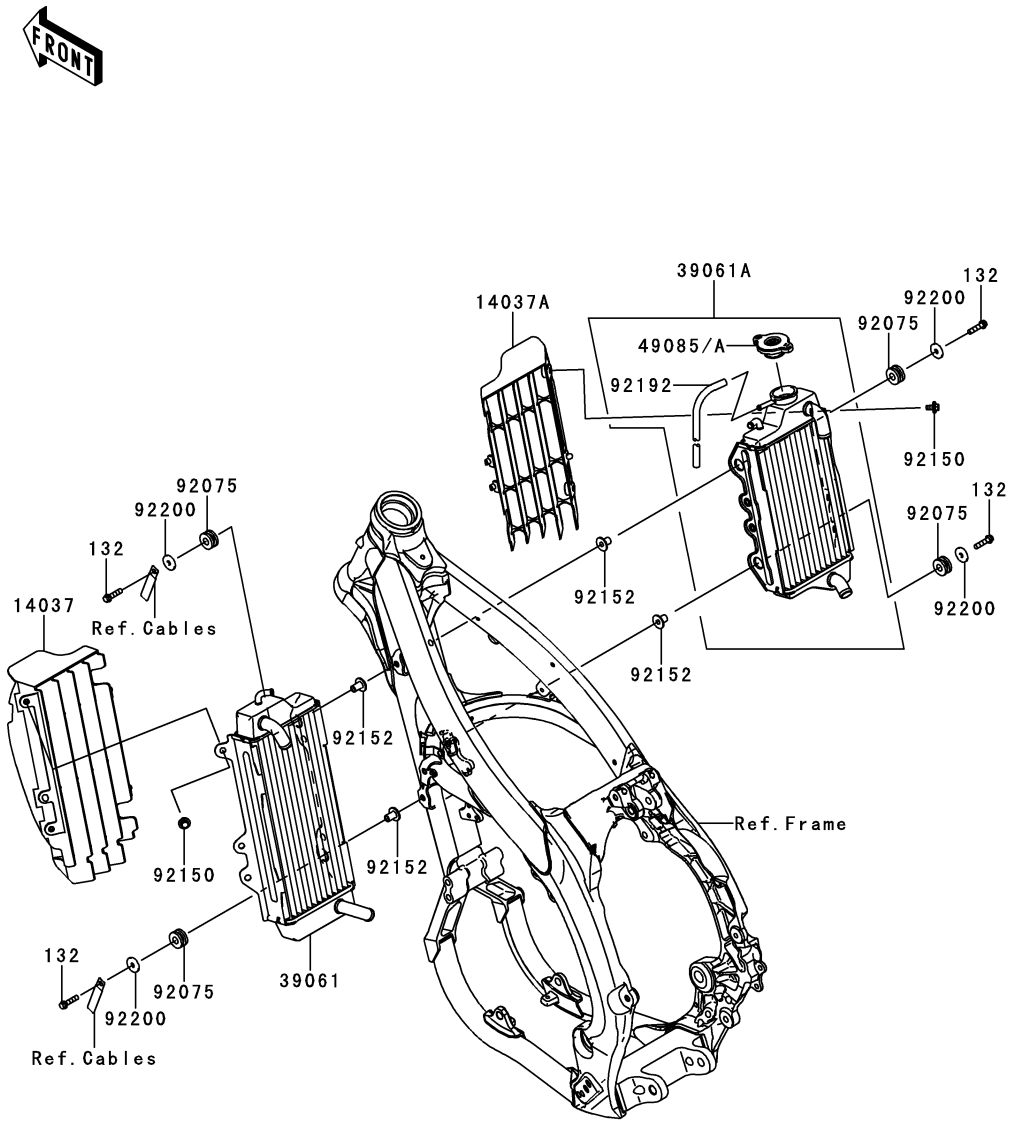

Ref. No.	Part No.	Description	Spec Code	Quantity-KX450 '13 FDF	'14 FEF			
14037	14037-0117-6C	SCREEN,LH,EBONY		1	1			
14037A	14037-0118-6C	SCREEN,RH,EBONY		1	1			
39061	39061-0218	RADIATOR-ASSY,LH		1	1			
39061A	39061-0571	RADIATOR-ASSY,RH		1	1			
49085	49085-1070	CAP-ASSY-PRESSURE,P1.1		1	1			
49085A	49085-1078 (OPTION)	CAP-ASSY-PRESSURE		1	1			
92075	92075-209	DAMPER		4	4			
92150	92150-1435	BOLT,6X12		2	2			
92152	92152-0666	COLLAR		4	4			
92192	92192-0167	TUBE,6X9X640		1	1			
92200	92200-0271	WASHER,6.5X22X2.3		4	4			
132	132BB0625	BOLT-FLANGED-SMALL,6X25		4	4			

E3036

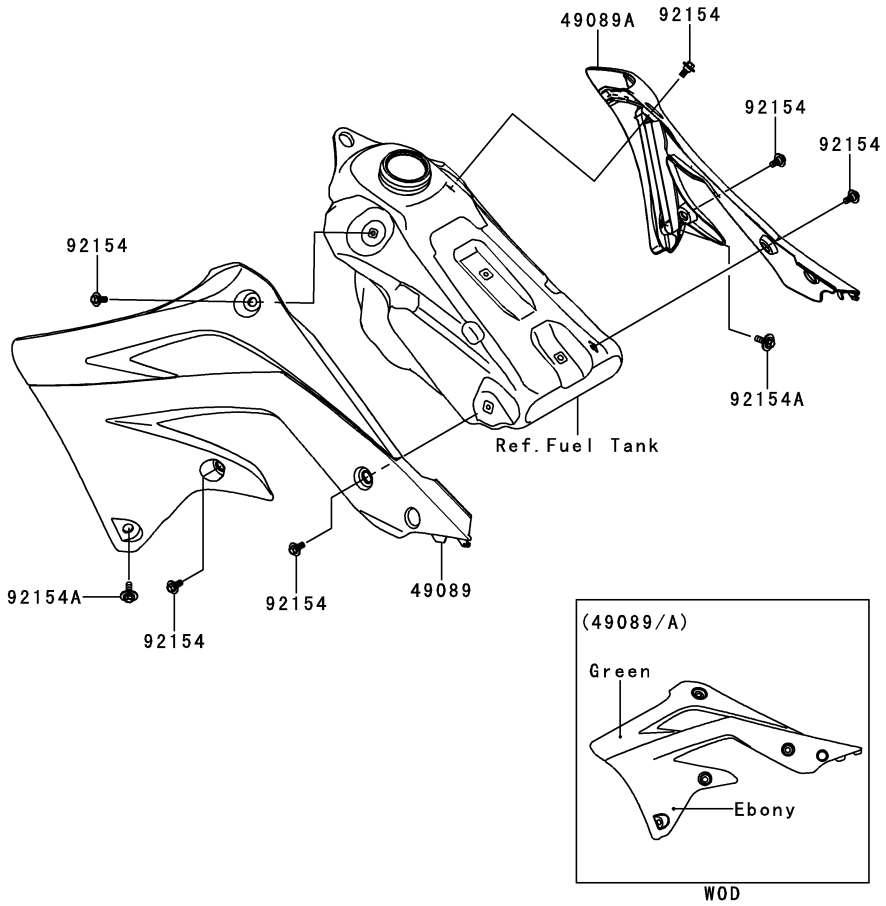

Ref. No.	Part No.	Description	Spec Code	Quantity-KX450 '13 FDF	'14 FEF			
49089	49089-0779-25M	SHROUD-ENGINE,LH,GREEN/EBONY		1	1			
49089A	49089-0780-25M	SHROUD-ENGINE,RH,GREEN/EBONY		1	1			
92154	92154-0546	BOLT,FLANGED,6X9		6	6			
92154A	92154-0915	BOLT,FLANGED,6X20		2	2			

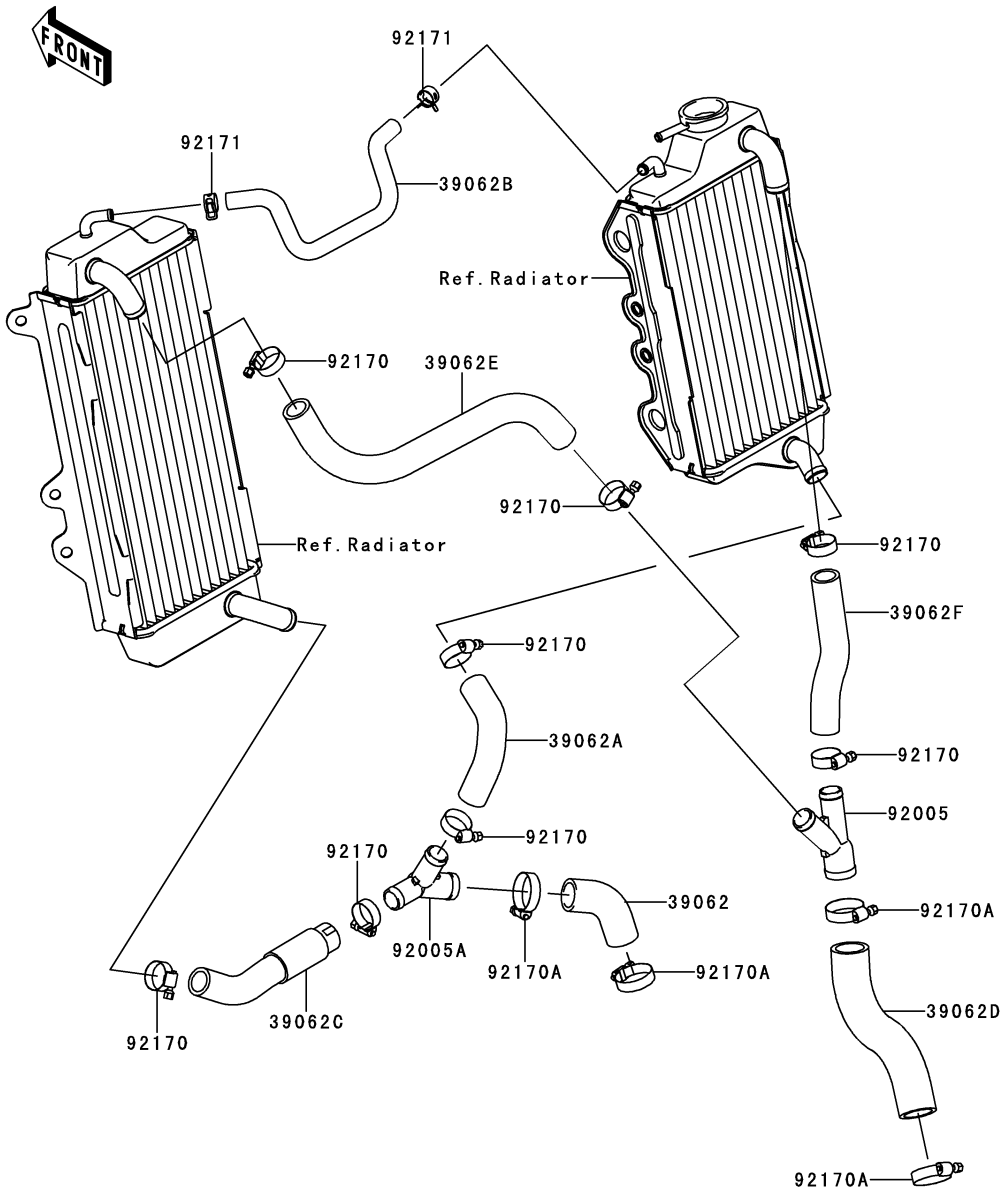

Ref. No.	Part No.	Description	Spec Code	Quantity-KX450 '13 FDF	'14 FEF			
39062	39062-0088	HOSE-COOLING,W/P-FIT.		1	1			
39062A	39062-0301	HOSE-COOLING,RAD.RH LOW-FIT.		1	1			
39062B	39062-0302	HOSE-COOLING,RAD.LH-RAD.RH		1	1			
39062C	39062-0303	HOSE-COOLING,RAD.LH LOW-FIT.		1	1			
39062D	39062-0348	HOSE-COOLING,HEAD-3WAY FIT.		1	1			
39062E	39062-0349	HOSE-COOLING,FIT.-RAD. LH UPP		1	1			
39062F	39062-0350	HOSE-COOLING,FIT.-RAD. RH UPP		1	1			
92005	92005-0066	FITTING,3WAY,HEAD-RAD		1	1			
92005A	92005-0067	FITTING,3WAY,RAD-W/P		1	1			
92170	92170-1077	CLAMP,HOSE,26MM		8	8			
92170A	92170-1286	CLAMP,HOSE,32MM		4	4			
92171	92171-0372	CLAMP,CLIP,12.5MM		2	2			

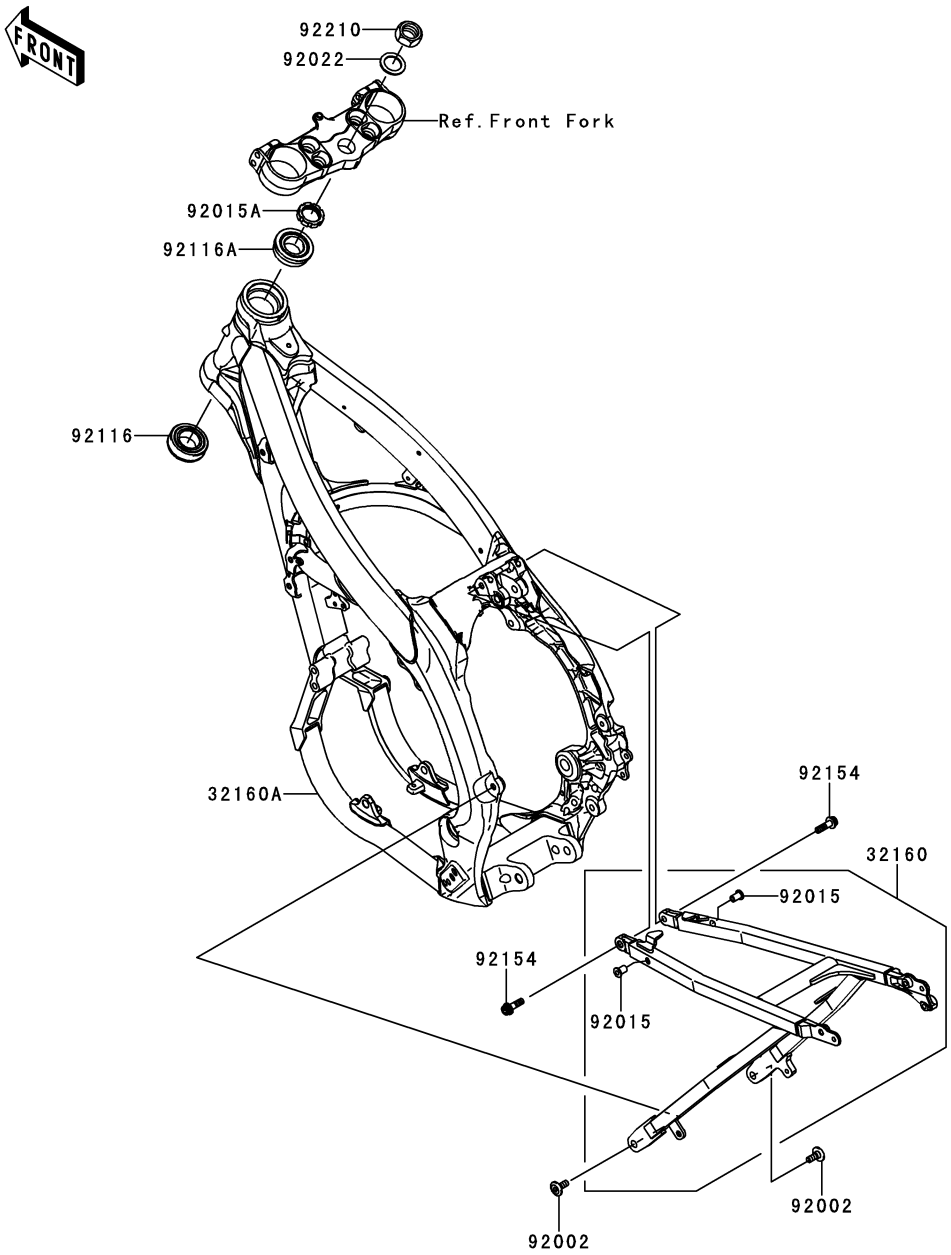

F2120

Ref. No.	Part No.	Description	Spec Code	Quantity-KX450 '13 FDF	'14 FEF			
32160	32160-0543	FRAME-COMP,RR		1	1			
32160A	32160-0636	FRAME-COMP,FR		1	1			
92002	92002-1736	BOLT,DISC PLATE,8X20		2	2			
92015	92015-1791	NUT,POP,6MM,L=15		2	2			
92015A	92015-1861	NUT,STEERING STEM,28MM		1	1			
92022	92022-250	WASHER,25X36X2.3		1	1			
92116	92116-1069	BEARING-ROLLER,HI-CAP32006JRRS		1	1			
92116A	92116-1076	BEARING-ROLLER,HI-CAP320/28JRR		1	1			
92154	92154-0024	BOLT,SOCKET,8X32		2	2			
92210	92210-0066	NUT,24MM		1	1			

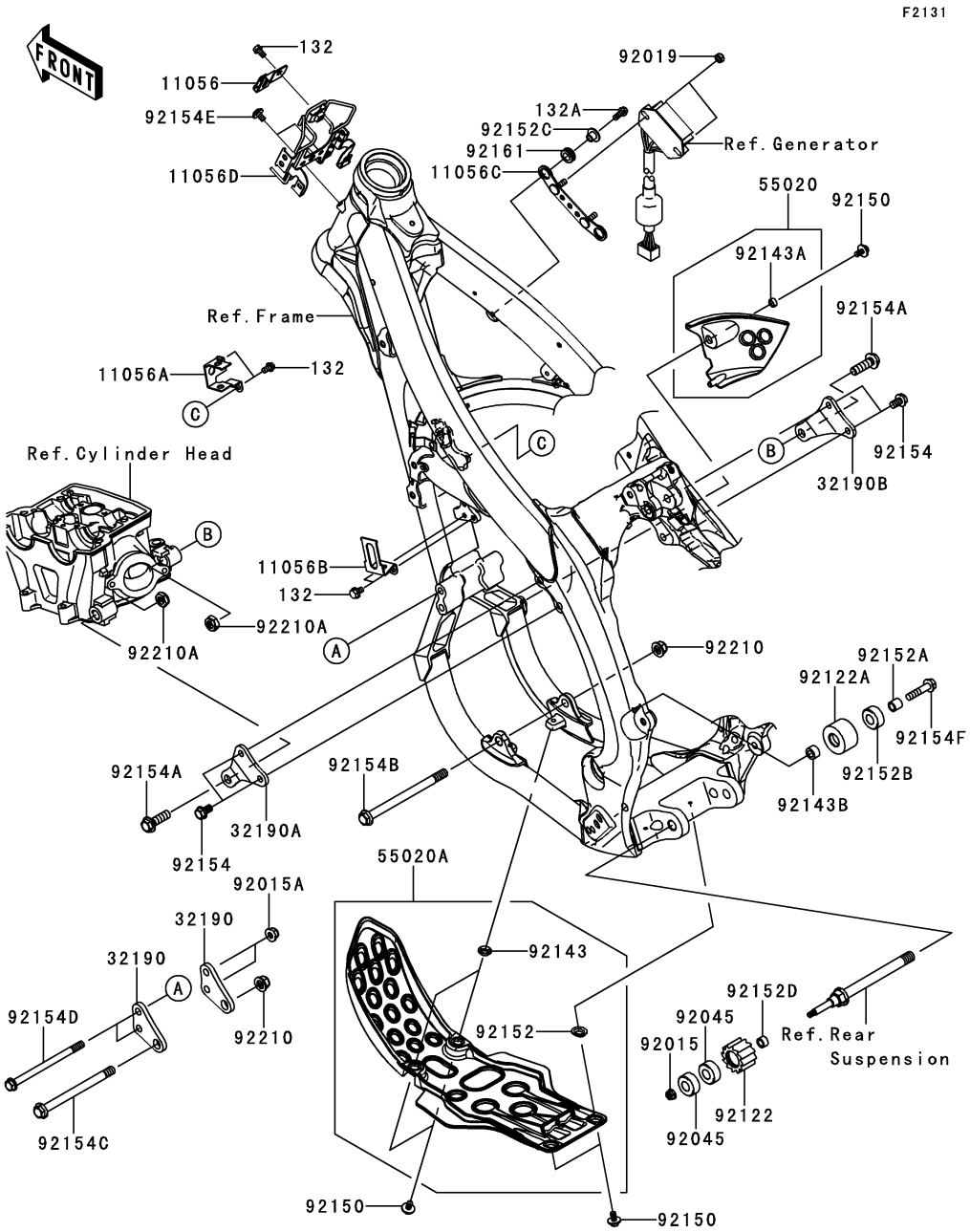

Ref. No.	Part No.	Description	Spec Code	Quantity-KX450 '13 FDF	'14 FEF			
11056	11056-0070	BRACKET,DIAG CONNECTOR		1	1			
11056A	11056-0071	BRACKET,BANK SENSOR		1	1			
11056B	11056-0072	BRACKET,CONDENSER		1	1			
11056C	11056-0624	BRACKET,REGULATOR		1	1			
11056D	11056-2219	BRACKET,ECU		1	1			
32190	32190-0386	BRACKET-ENGINE,FR		2	2			
32190A	32190-0463	BRACKET-ENGINE,UPP,LH		1	1			
32190B	32190-0464	BRACKET-ENGINE,UPP,RH		1	1			
55020	55020-0434-6C	GUARD,ENGINE,SIDE,RH,EBONY		1	1			
55020A	55020-0440-6C	GUARD,ENGINE,LWR,EBONY		1	1			
92015	92015-1339	NUT,LOCK,FLANGED,6MM		1	1			
92015A	92015-1432	NUT,8MM		2	2			
92019	92019-008	NUT,LOCK,6MM		2	2			
92045	92045-0060	BEARING-BALL,608LLU/2A		2	2			
92122	92122-0016	ROLLER,CHAIN GUIDE		1	1			
92122A	92122-0042	ROLLER,CHAIN		1	1			
92143	92143-1196	COLLAR		2	2			
92143A	92143-1307	COLLAR		1	1			
92143B	92143-1642	COLLAR,8.5X15X9		1	1			
92150	92150-1435	BOLT,6X12		5	5			
92152	92152-0052	COLLAR		2	2			
92152A	92152-0944	COLLAR,8.5X12.5X12.5		1	1			
92152B	92152-0945	COLLAR,12.7X27.2X12		1	1			
92152C	92152-1449	COLLAR		2	2			
92152D	92152-1624	COLLAR,8.1X12.5X7.5		1	1			
92154	92154-0380	BOLT,FLANGED,8X14		4	4			
92154A	92154-0381	BOLT,FLANGED,10X32		2	2			
92154B	92154-0522	BOLT,FLANGED,10X137		1	1			
92154C	92154-0523	BOLT,FLANGED,10X124		1	1			
92154D	92154-0524	BOLT,FLANGED,8X122		2	2			
92154E	92154-0774	BOLT,SOCKET,6X10		2	2			
92154F	92154-0913	BOLT,FLANGED,8X35		1	1			
92161	92161-0266	DAMPER		2	2			
92210	92210-1080	NUT,LOCK,FLANGED,10MM		2	2			
92210A	92210-1184	NUT,LOCK,10MM		2	2			
132	132BA0610	BOLT-FLANGED-SMALL,6X10		5	5			
132A	132BA0614	BOLT-FLANGED-SMALL,6X14		2	2			

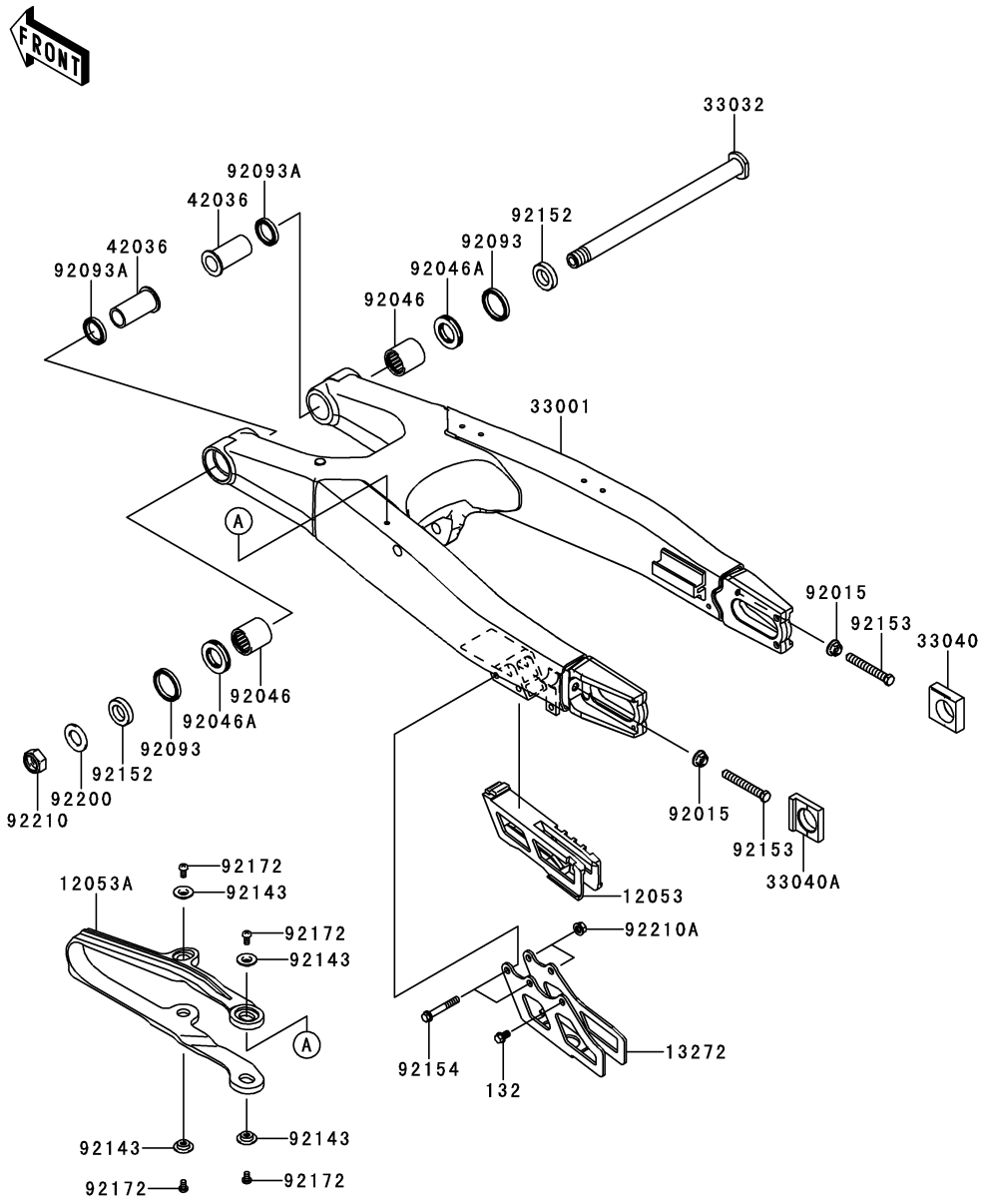

Ref. No.	Part No.	Description	Spec Code	Quantity-KX450 '13 FDF	'14 FEF			
12053	12053-0125	GUIDE-CHAIN		1	1			
12053A	12053-0192	GUIDE-CHAIN,HARDNESS UP		1	1			
13272	13272-1169	PLATE,CHAIN GUIDE		1	1			
33001	33001-0594	ARM-COMP-SWING		1	1			
33032	33032-0012	SHAFT-SWING ARM		1	1			
33040	33040-0020	ADJUSTER-CHAIN,RH		1	1			
33040A	33040-0075	ADJUSTER-CHAIN,LH		1	1			
42036	42036-0019	SLEEVE,SWING ARM,L=47.5		2	2			
92015	92015-1014	NUT,FLANGED,8MM		2	2			
92046	92046-1174	BEARING-NEEDLE,TA2230Z		2	2			
92046A	92046-1240	BEARING-NEEDLE,NTBR22356E01		2	2			
92093	92093-1434	SEAL,SDO29X35X4.5		2	2			
92093A	92093-1435	SEAL,SDO22X29X5		2	2			
92143	92143-1676	COLLAR		4	4			
92152	92152-0292	COLLAR,17.1X29X6		2	2			
92153	92153-0620	BOLT,8X56		2	2			
92154	92154-0511	BOLT,FLANGED,6X42		2	2			
92172	92172-0119	SCREW,5X8		4	4			
92200	92200-0285	WASHER,17.2X30X2.3		1	1			
92210	92210-0285	NUT,LOCK,16MM		1	1			
92210A	92210-0630	NUT,FLANGED,6MM		2	2			
132	132BA0610	BOLT-FLANGED-SMALL,6X10		1	1			

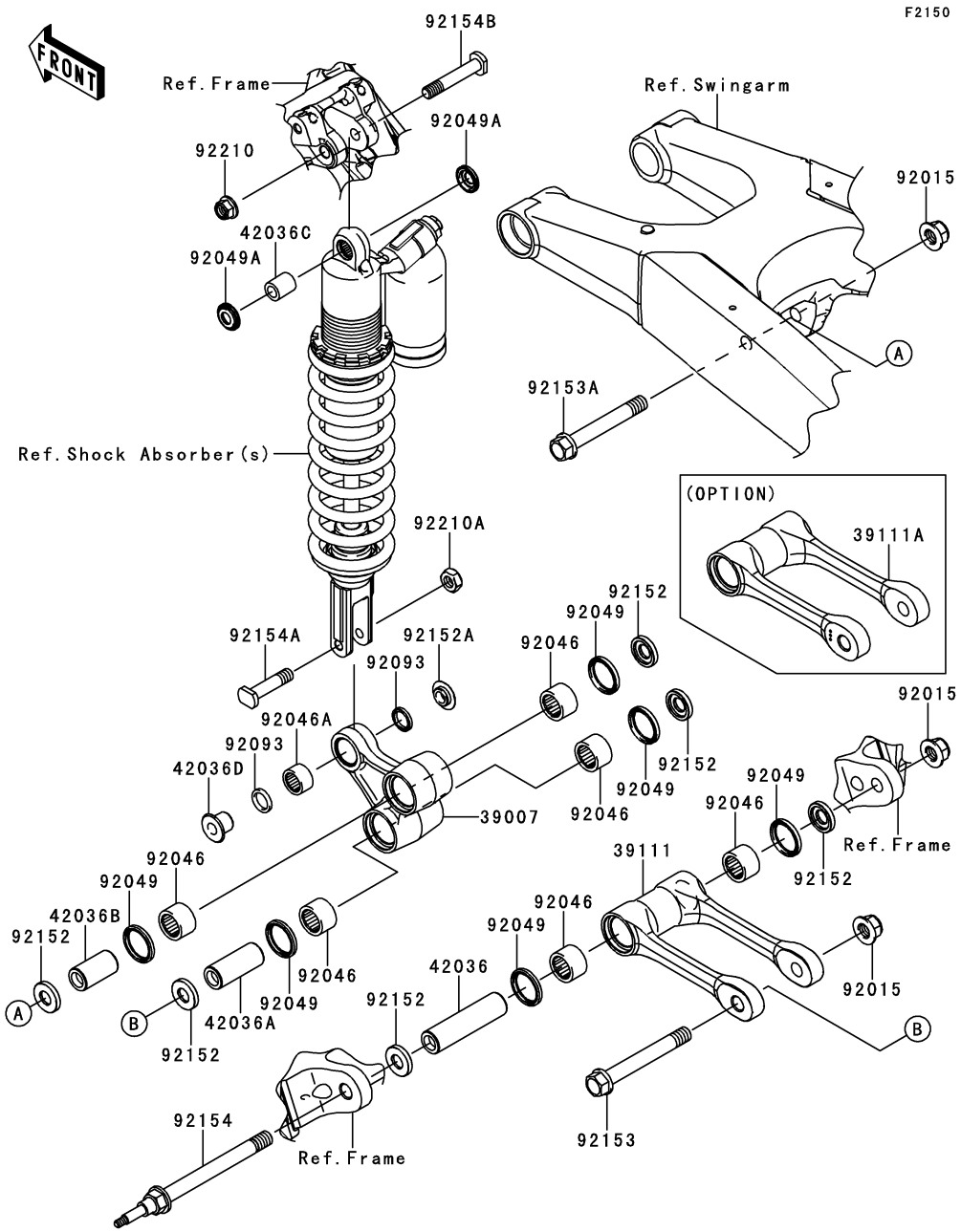

Ref. No.	Part No.	Description	Spec Code	Quantity-KX450 '13 FDF	'14 FEF			
39007	39007-0182	ARM-SUSP,UNI TRAK		1	1			
39111	39111-0086	ROD-TIE,SUSPENSION		1	1			
39111A	39111-0310 (OPTION)	ROD-TIE,L=136		1	1			
42036	42036-0020	SLEEVE,ROD,L=78.4		1	1			
42036A	42036-0021	SLEEVE,SUSPENSION ARM,L=49		1	1			
42036B	42036-0022	SLEEVE,SUSPENSION ARM,L=37		1	1			
42036C	42036-0030	SLEEVE,10X16X19.3		1	1			
42036D	42036-1351	SLEEVE		1	1			
92015	92015-1433	NUT,LOCK,FLANGED,12MM		3	3			
92046	92046-1151	BEARING-NEEDLE,F-2016		6	6			
92046A	92046-1301	BEARING-NEEDLE,7E-HVS16X22X12		1	1			
92049	92049-0063	SEAL-OIL,SDO26X32X4		6	6			
92049A	92049-0069	SEAL-OIL		2	2			
92093	92093-1436	SEAL		2	2			
92152	92152-0425	COLLAR		6	6			
92152A	92152-1139	COLLAR		1	1			
92153	92153-0938	BOLT,FLANGED,12X95		1	1			
92153A	92153-0939	BOLT,FLANGED,12X86		1	1			
92154	92154-0394	BOLT,12X122		1	1			
92154A	92154-0512	BOLT,10X45		1	1			
92154B	92154-0513	BOLT,10X58		1	1			
92210	92210-1080	NUT,LOCK,FLANGED,10MM		1	1			
92210A	92210-1184	NUT,LOCK,10MM		1	1			

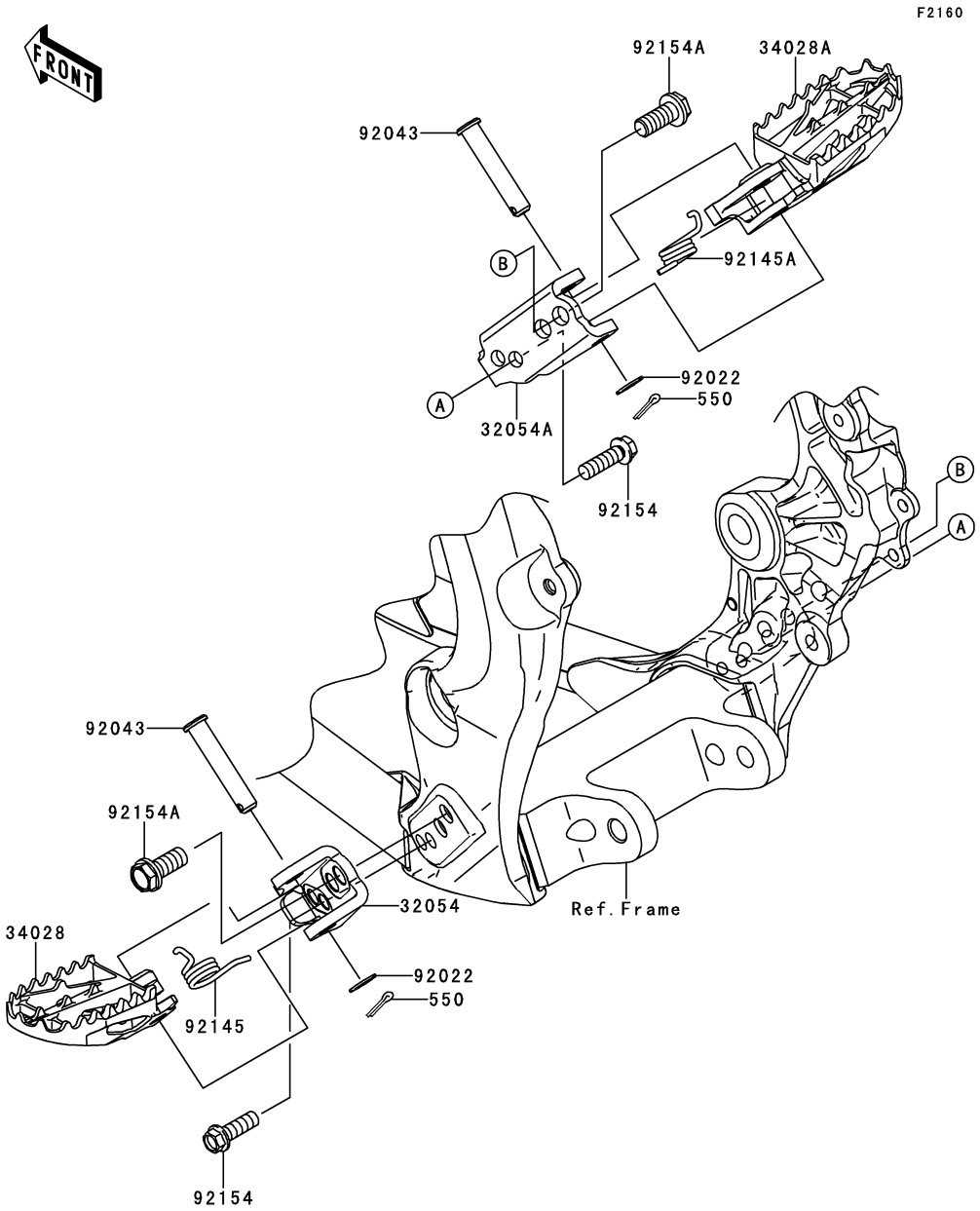

Ref. No.	Part No.	Description	Spec Code	Quantity-KX450 '13 FDF	'14 FEF			
32054	32054-0054	BRACKET-STEP,LH		1	1			
32054A	32054-0055	BRACKET-STEP,RH		1	1			
34028	34028-0104	STEP,LH		1	1			
34028A	34028-0105	STEP,RH		1	1			
92022	92022-1829	WASHER,10.2X16X1		2	2			
92043	92043-0074	PIN,10X42.5		2	2			
92145	92145-0819	SPRING,STEP,LH		1	1			
92145A	92145-0820	SPRING,STEP,RH		1	1			
92154	92154-0515	BOLT,FLANGED,8X25		2	2			
92154A	92154-0545	BOLT,FLANGED,10X23		2	2			
550	550S3020	PIN-COTTER,3.0X20		2	2			

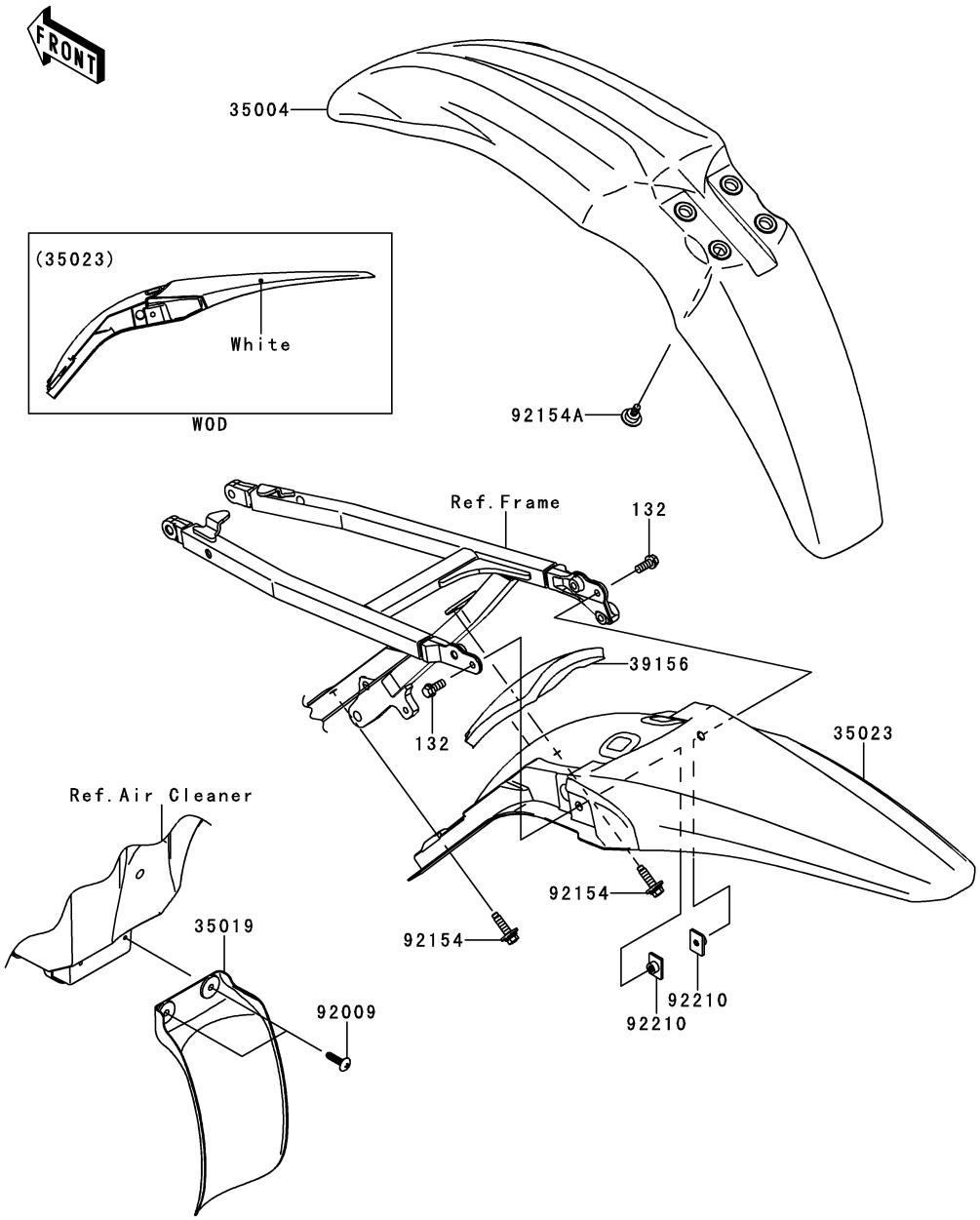

F2170

Ref. No.	Part No.	Description	Spec Code	Quantity-KX450 '13 FDF	Quantity-KX450 '14 FEF			
35004	35004-0319-290	FENDER-FRONT,L.GREEN		1	1			
35019	35019-0050	FLAP,AIR FILTER		1	1			
35023	35023-0357-266	FENDER-REAR,B.WHITE		1	1			
39156	39156-0830	PAD		1	1			
92009	92009-1993	SCREW,TAPPING,5X20		2	2			
92154	92154-0772	BOLT,FLANGED,6X23		2	2			
92154A	92154-0972	BOLT,6X18.5		4	4			
92210	92210-1352	NUT,PLATE,6MM		2	2			
132	132BA0614	BOLT-FLANGED-SMALL,6X14		2	2			

F2190

Ref. No.	Part No.	Description	Spec Code	Quantity-KX450 '13 FDF	'14 FEF			
34024	34024-0074	STAND-SIDE		1	1			

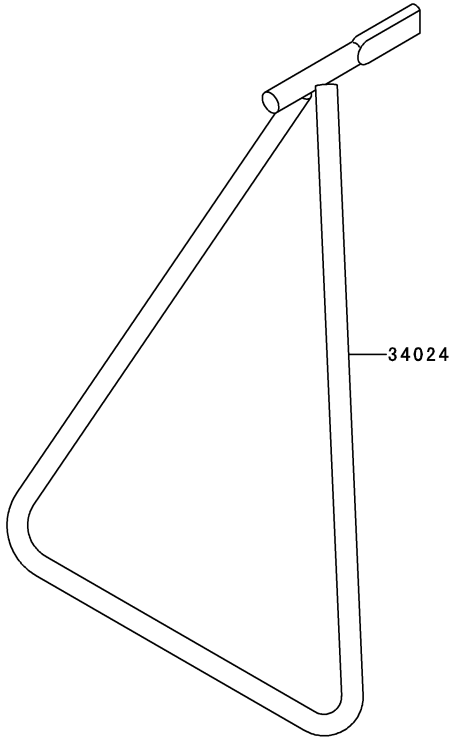

F2210

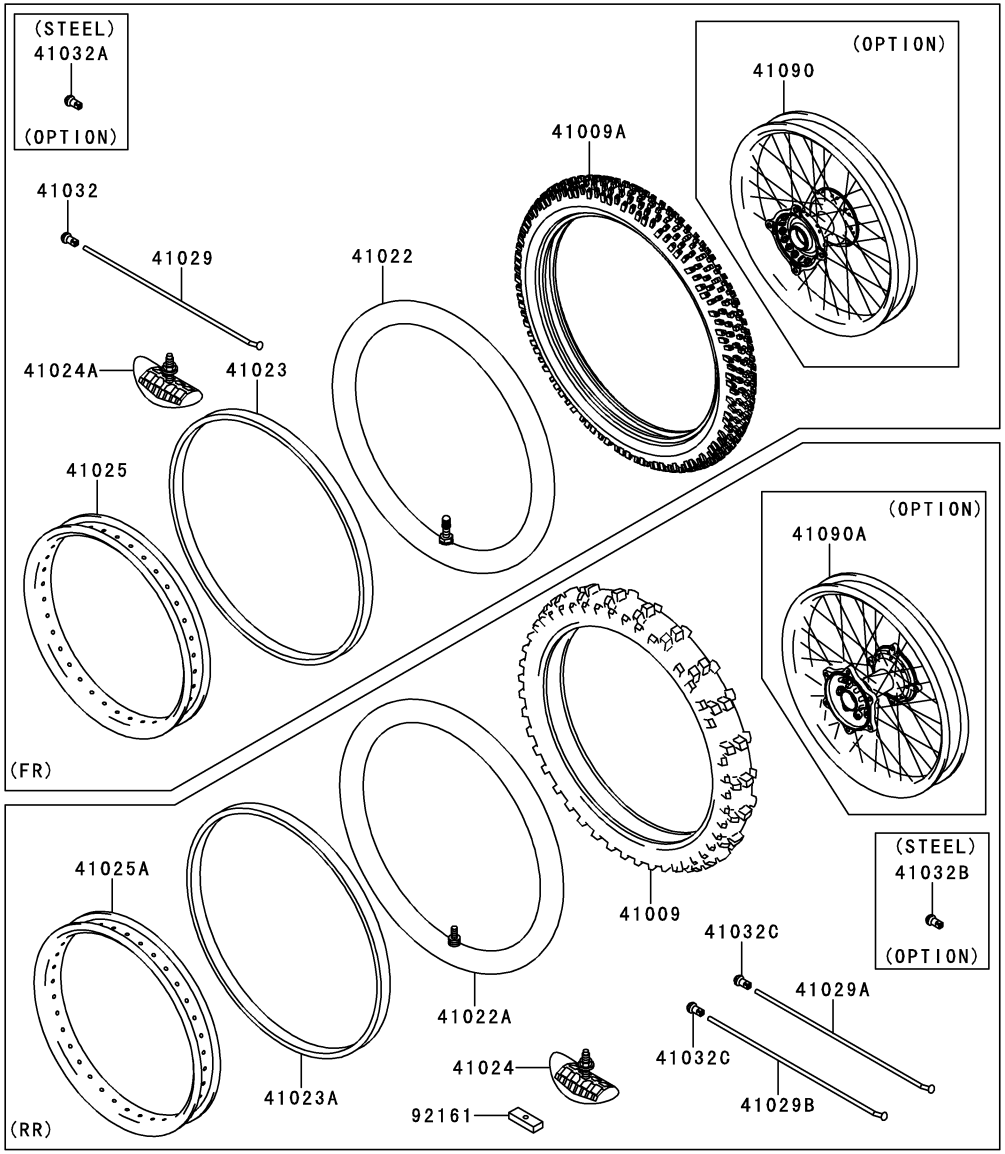

Ref. No.	Part No.	Description	Spec Code	Quantity-KX450 '13 FDF	'14 FEF			
41009	41009-0236	TIRE,RR,120/80-19 63M,M404(BS)		1	1			
41009A	41009-0253	TIRE,FR,80/100-21 51M,M403(BS)		1	1			
41022	41022-1107	TUBE-TIRE,FR,MC90/90-21(BS)		1	1			
41022A	41022-1140	TUBE-TIRE,RR,110/90-19(BS)		1	1			
41023	41023-1009	BAND-RIM,X-21(BS)		1	1			
41023A	41023-1081	BAND-RIM,110/90-19(BS)		1	1			
41024	41024-009	STOPPER-RIM,2.15-M(DUNLOP)		1	1			
41024A	41024-010	STOPPER-RIM,1.60-M(DUNLOP)		1	1			
41025	41025-0094-WC	RIM,FR,1.60X21,BLACK		1	1			
41025A	41025-0095-WC	RIM,RR,2.15X19,BLACK		1	1			
41029	41029-0003	SPOKE-INNER,FR		36	36			
41029A	41029-1204	SPOKE-INNER,RR,202MMX160D		27	27			
41029B	41029-1330	SPOKE-INNER,RR,204MMX159D		9	9			
41032	41032-0002	NIPPLE-SPOKE,ALUMINIUM		36	36			
41032A	41032-1077 (OPTION)	NIPPLE-SPOKE,8X9X20(+),STEEL		36	36			
41032B	41032-1085 (OPTION)	NIPPLE-SPOKE,STEEL		36	36			
41032C	41032-1086	NIPPLE-SPOKE,ALUMINIUM		36	36			
41090	41090-0080-WC (OPTION)	WHEEL,FR,1.60X21,AL NIPPLE,BLK		1	1			
41090A	41090-0081-WC (OPTION)	WHEEL,RR,2.15X19,AL NIPPLE,BLK		1	1			
92161	92161-1184	DAMPER,RIM STOPPER		1	1			

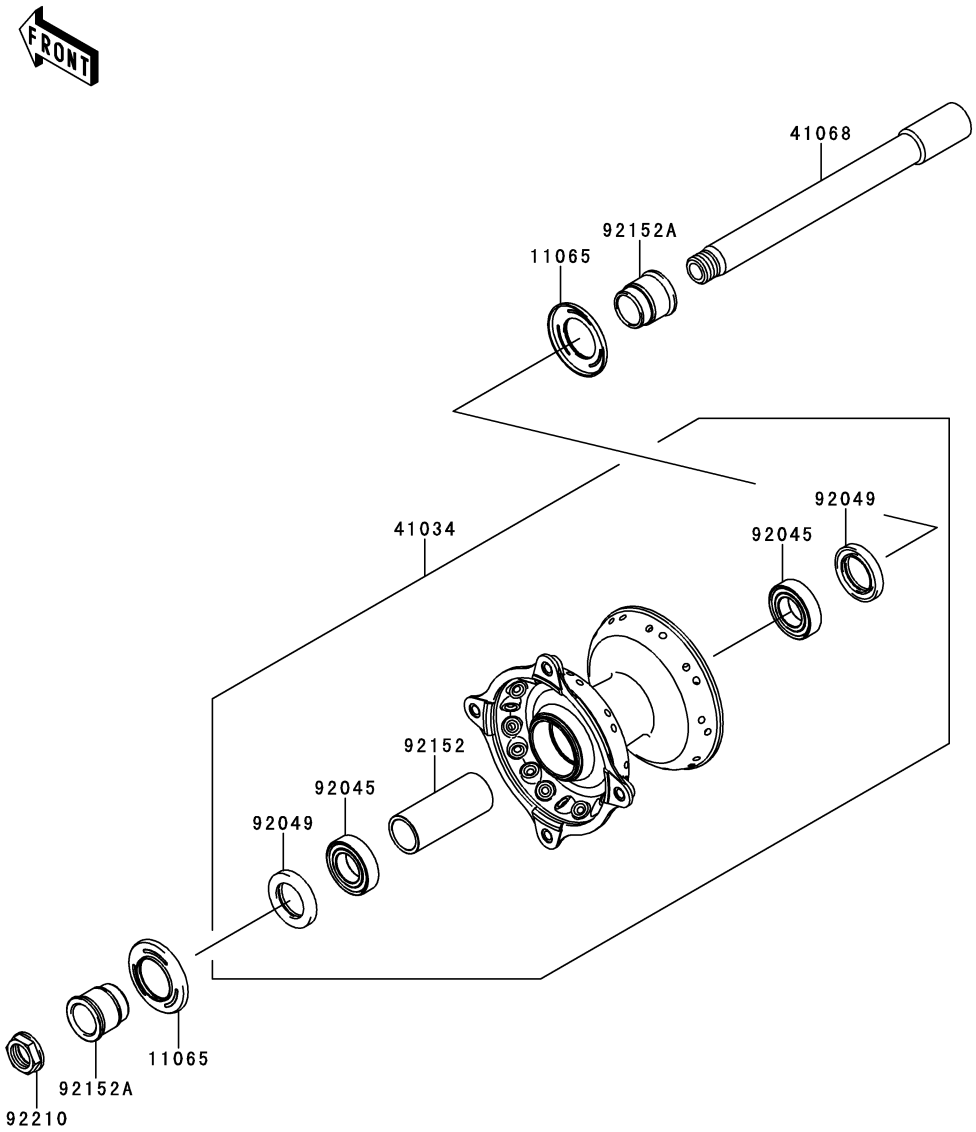

Ref. No.	Part No.	Description	Spec Code	Quantity-KX450 '13 FDF	'14 FEF			
11065	11065-0350	CAP,AXLE		2	2			
41034	41034-0034	DRUM-ASSY,FRONT BRAKE		1	1			
41068	41068-0004	AXLE,FR		1	1			
92045	92045-1284	BEARING-BALL,69042RS		2	2			
92049	92049-1403	SEAL-OIL,BJNC-2 25X37X5		2	2			
92152	92152-0028	COLLAR,FRONT BRAKE DRUM,L=65		1	1			
92152A	92152-0845	COLLAR,L=27.5		2	2			
92210	92210-0065	NUT,18MM		1	1			

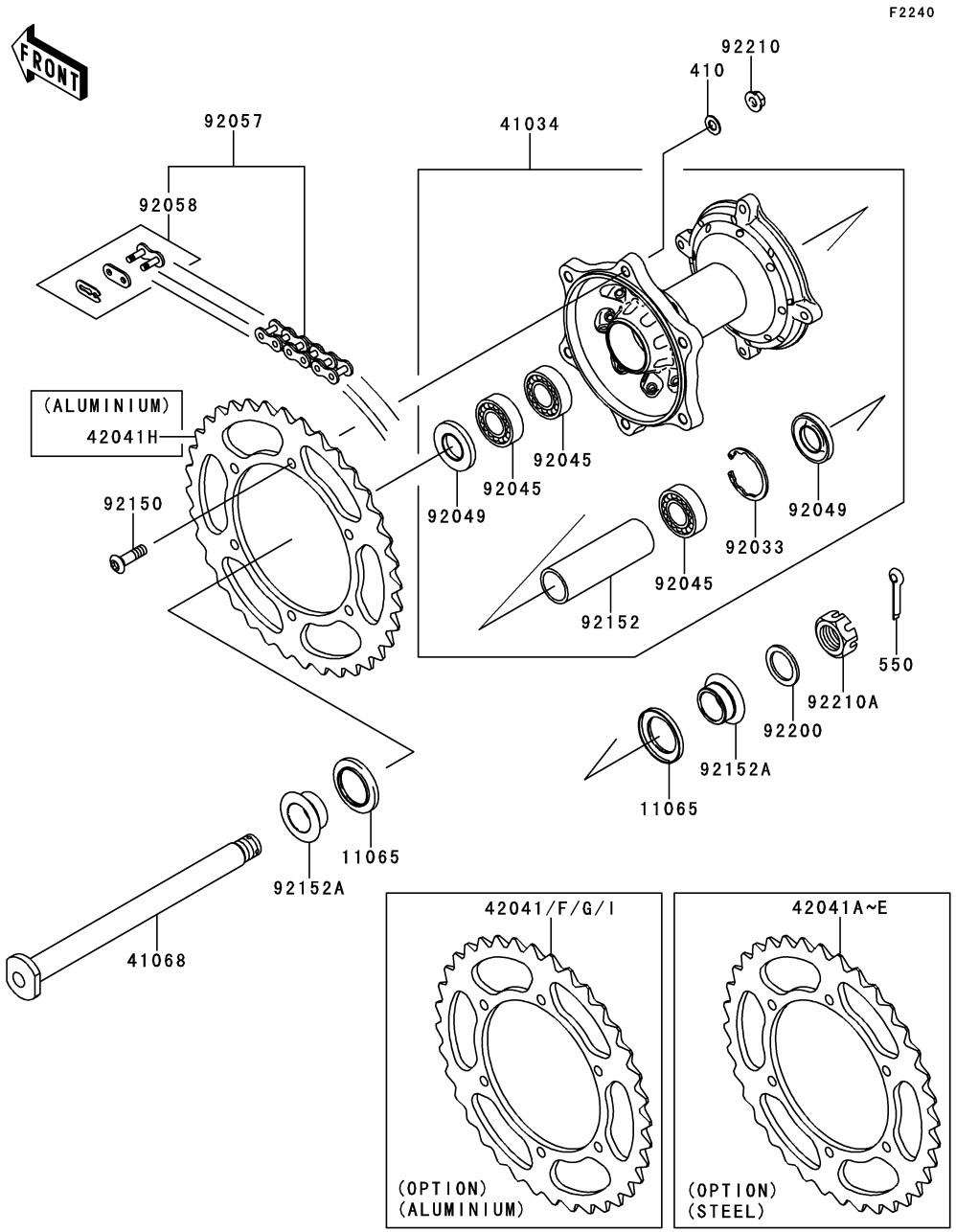

Ref. No.	Part No.	Description	Spec Code	Quantity-KX450 '13 FDF	'14 FEF			
11065	11065-1253	CAP,AXLE		2	2			
41034	41034-0057	DRUM-ASSY,REAR BRAKE		1	1			
41068	41068-1466	AXLE,RR		1	1			
42041	42041-0001 (OPTION)	SPROCKET-HUB,52T,AL		1	1			
42041A	42041-1383 (OPTION)	SPROCKET-HUB,48T,STEEL		1	1			
42041B	42041-1384 (OPTION)	SPROCKET-HUB,49T,STEEL		1	1			
42041C	42041-1408 (OPTION)	SPROCKET-HUB,50T,STEEL		1	1			
42041D	42041-1428 (OPTION)	SPROCKET-HUB,51T,STEEL		1	1			
42041E	42041-1429 (OPTION)	SPROCKET-HUB,52T,STEEL		1	1			
42041F	42041-1448 (OPTION)	SPROCKET-HUB,48T,AL		1	1			
42041G	42041-1449 (OPTION)	SPROCKET-HUB,49T,AL		1	1			
42041H	42041-1450	SPROCKET-HUB,50T,AL		1	1			
42041I	42041-1451 (OPTION)	SPROCKET-HUB,51T,AL		1	1			
92033	92033-1041	RING-SNAP,42MM		1	1			
92045	92045-1446	BEARING-BALL,69052RS		3	3			
92049	92049-1614	SEAL-OIL		2	2			
92057	92057-0192	CHAIN,DRIVE,DID520DMA4X114L		1	1			
92058	92058-1074	JOINT-CHAIN,DRIVE		1	1			
92150	92150-1978	BOLT,SOCKET,8X28		6	6			
92152	92152-1427	COLLAR,REAR BRAKE DRUM,L=106.5		1	1			
92152A	92152-1544	COLLAR,RR HUB		2	2			
92200	92200-1623	WASHER,22.5X35X2.3		1	1			
92210	92210-0493	NUT,FLANGED,LOCK,8MM		6	6			
92210A	92210-1411	NUT,CASTLE,22MM		1	1			
410	410AA0800	WASHER-PLAIN-SMALL,8MM		6	6			
550	550AA3035	PIN-COTTER,3.0X35		1	1			

F2260

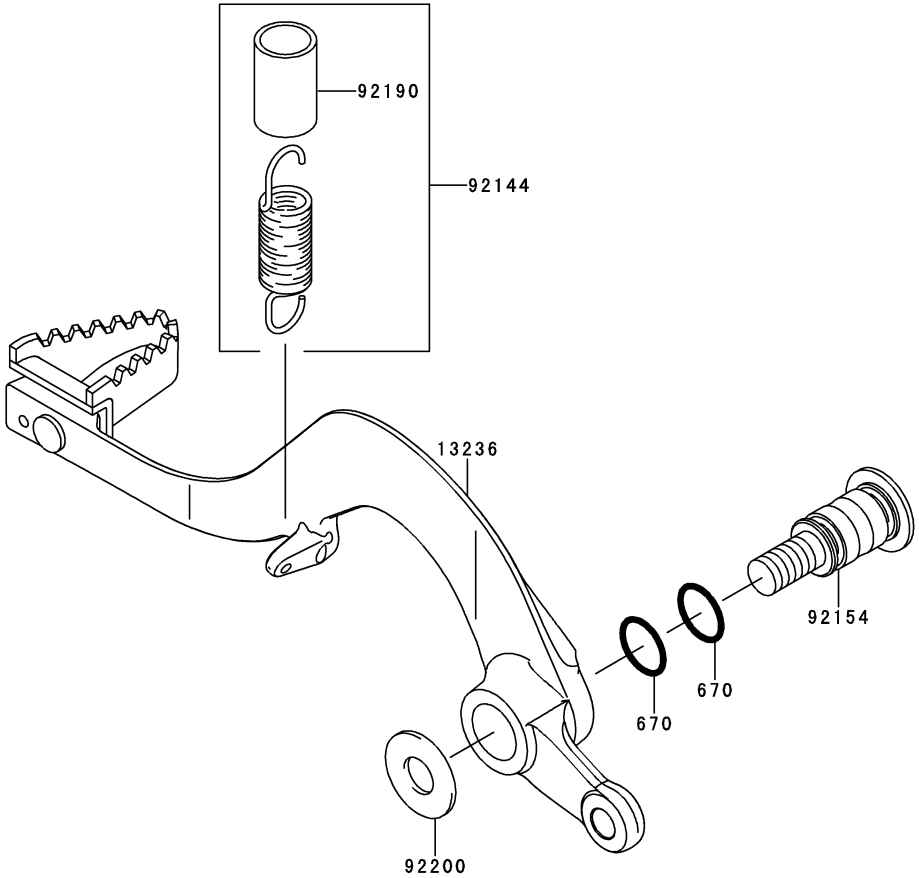

Ref. No.	Part No.	Description	Spec Code	Quantity-KX450 '13 FDF	'14 FEF			
13236	13236-0202	LEVER-COMP,BRAKE PEDAL		1	1			
92144	92144-1752	SPRING,BRAKE PEDAL RETURN		1	1			
92154	92154-0516	BOLT,BRAKE PEDAL,10MM		1	1			
92190	92190-1488	TUBE,13X16X25		1	1			
92200	92200-0154	WASHER,10.5X24X1.5		1	1			
670	670B2012	O RING,12MM		2	2			

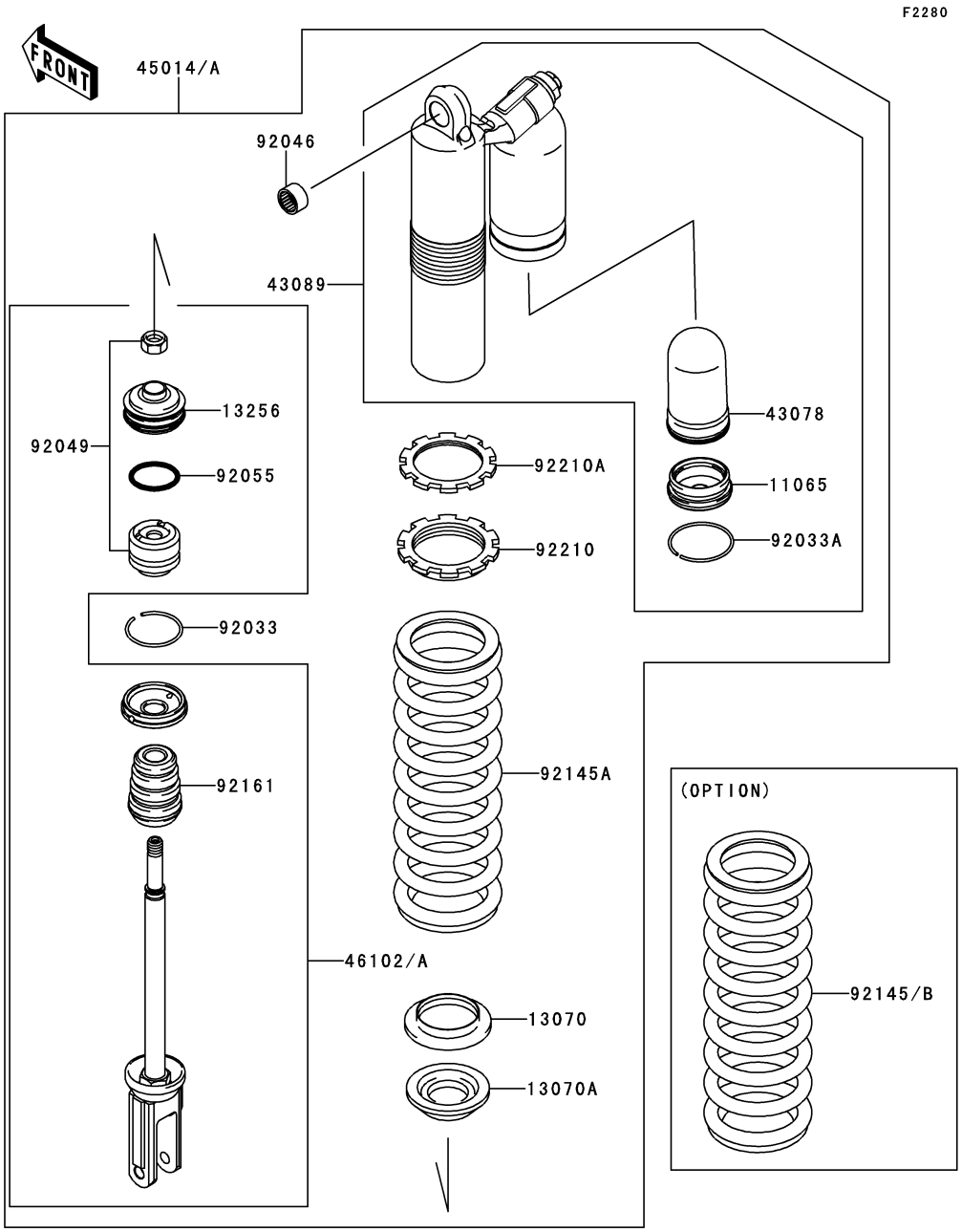

Ref. No.	Part No.	Description	Spec Code	Quantity-KX450 '13 FDF	'14 FEF			
11065	11065-0338	CAP,SUB-TANK		1	1			
13070	13070-0095	GUIDE,SPRING		1	1			
13070A	13070-0101	GUIDE,SPRING		1	1			
13256	13256-0006	PISTON,SHOCKABSORBER		1	1			
43078	43078-0555	RESERVOIR,SHOCKABSORBER		1	1			
43089	43089-0055-KW	CYLINDER-SHOCKABSORBER,BLUE		1	1			
45014	45014-0390-23N	SHOCKABSORBER,SPG BLK+ADJ BLUE						
	L- -		AS	1	1			
45014A	45014-0403-23N	SHOCKABSORBER,SPG BLK+ADJ BLUE						
	L- -		EU	1	1			
46102	46102-0580	ROD,PISTON						
	L- -		AS	1	1			
46102A	46102-0585	ROD,PISTON						
	L- -		EU	1	1			
92033	92033-0044	RING-SNAP		1	1			
92033A	92033-0059	RING-SNAP		1	1			
92046	92046-1301	BEARING-NEEDLE,7E-HVS16X22X12		1	1			
92049	92049-0116	SEAL-OIL		1	1			
92055	92055-0165	RING-O		1	1			
92145	92145-0638-17D	SPRING,SHOCK,K=52N/MM,BLACK		1	1			
	(OPTION)							
92145A	92145-0716-17D	SPRING,SHOCK,K=54N/MM,BLACK		1	1			
92145B	92145-0762-17D	SPRING,SHOCK,K=56N/MM,BLACK		1	1			
	(OPTION)							
92161	92161-1172	DAMPER,SHOCKABSORBER		1	1			
92210	92210-0494	NUT,SPRING ADJUST		1	1			
92210A	92210-0495	NUT,SPRING ADJUST LOCK		1	1			

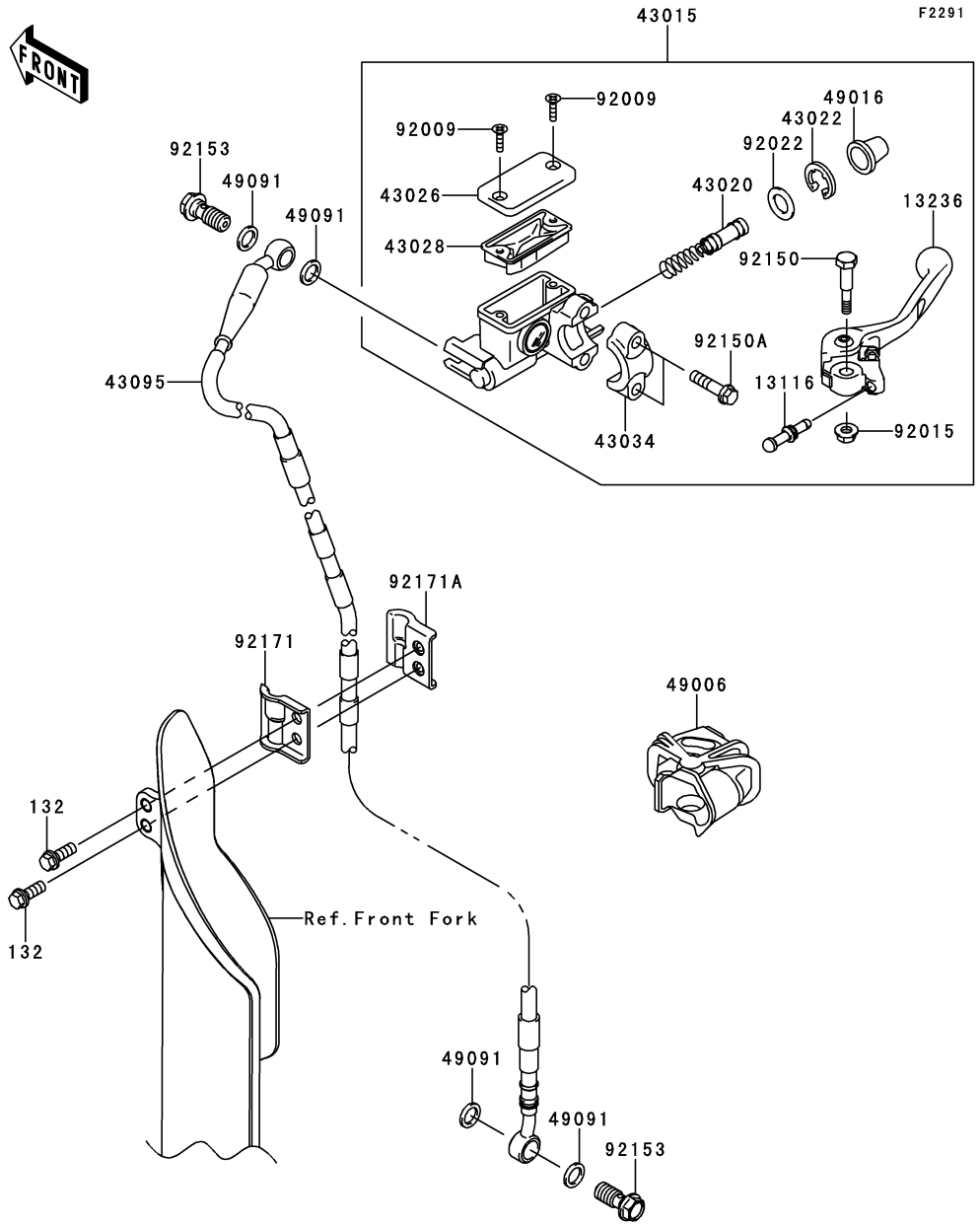

Ref. No.	Part No.	Description	Spec Code	Quantity-KX450 '13 FDF	'14 FEF			
13116	13116-0043	ROD-PUSH		1	1			
13236	13236-0724	LEVER-COMP,FRONT BRAKE		1	1			
43015	43015-0579	CYLINDER-ASSY-MASTER		1	1			
43020	43020-1115	PISTON-COMP-BRAKE		1	1			
43022	43022-1010	STOPPER-BRAKE,PISTON		1	1			
43026	43026-0020	CAP-BRAKE,MASTER CYLINDER		1	1			
43028	43028-1067	DIAPHRAGM		1	1			
43034	43034-1110	HOLDER-BRAKE		1	1			
43095	43095-0755	HOSE-BRAKE,L=1316		1	1			
49006	49006-0078	BOOT,FRONT BRAKE LEVER		1	1			
49016	49016-1044	COVER-SEAL,MASTER CYLINDER		1	1			
49091	49091-0001	WASHER-SEAL,10.1X14.5X1.5		4	4			
92009	92009-1795	SCREW		2	2			
92015	92015-1528	NUT,FLANGED,6MM		1	1			
92022	92022-1814	WASHER		1	1			
92150	92150-1451	BOLT,LEVER SET		1	1			
92150A	92150-1452	BOLT		2	2			
92153	92153-1419	BOLT,OIL,L=23		2	2			
92171	92171-0481	CLAMP,BRAKE HOSE,LH		1	1			
92171A	92171-0482	CLAMP,BRAKE HOSE,RH		1	1			
132	132BA0616	BOLT-FLANGED-SMALL,6X16		2	2			

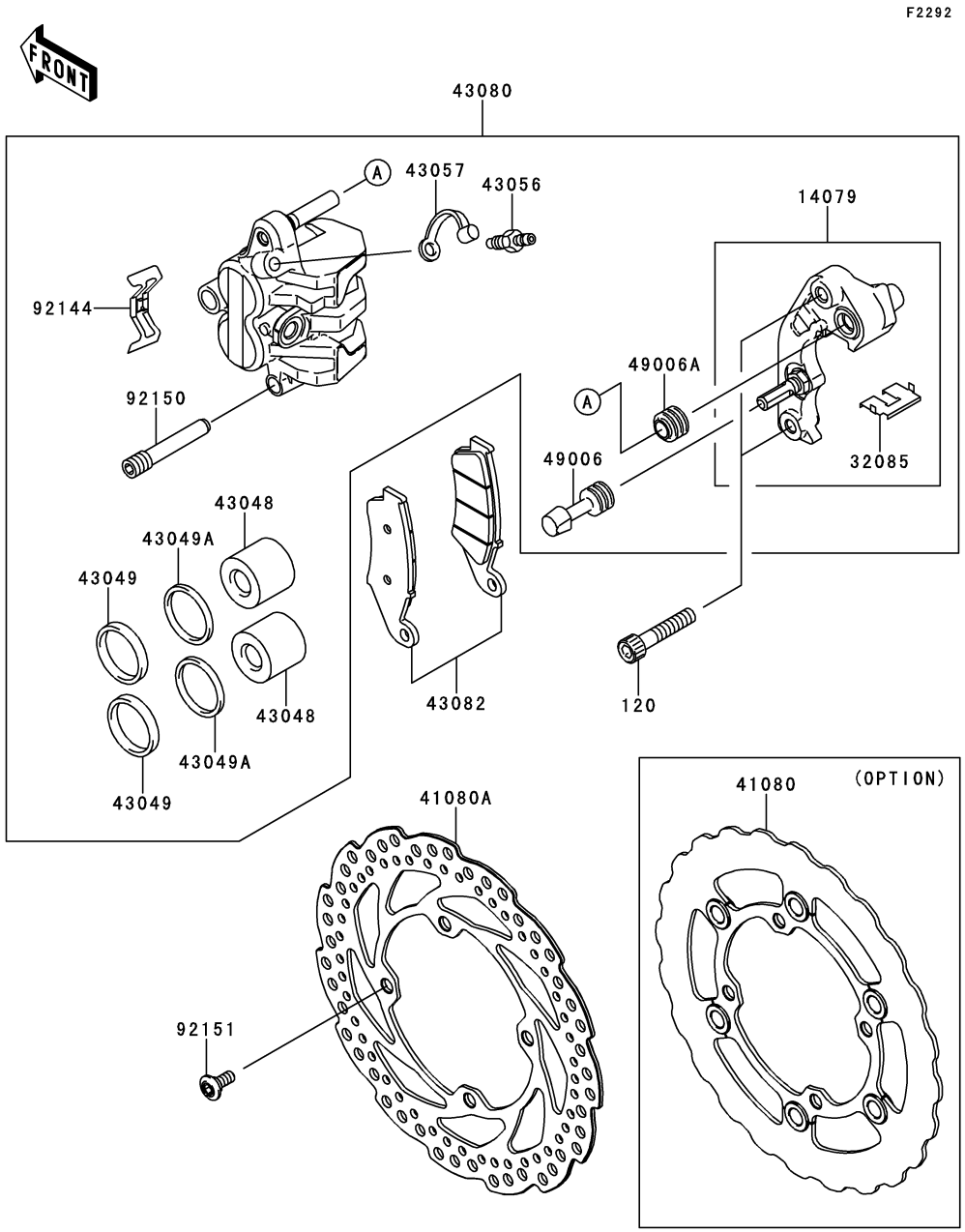

Ref. No.	Part No.	Description	Spec Code	Quantity-KX450 '13 FDF	'14 FEF			
14079	14079-0043	HOLDER-ASSY,FRONT CALIPER		1	1			
32085	32085-1361	STOPPER,PAD		1	1			
41080	41080-0193	DISC,FR		1	1			
	(OPTION)							
41080A	41080-0568	DISC,FR		1	1			
43048	43048-1093	PISTON-CALIPER		2	2			
43049	43049-1060	PACKING,PISTON SEAL		2	2			
43049A	43049-1061	PACKING,PISTON SEAL		2	2			
43056	43056-1055	BREATHER		1	1			
43057	43057-1001	CAP-BREATHER		1	1			
43080	43080-0081	CALIPER-SUB-ASSY,FR		1	1			
43082	43082-0132	PAD-ASSY-BRAKE		1	1			
49006	49006-1088	BOOT,CALIPER		1	1			
49006A	49006-1242	BOOT,CALIPER		1	1			
92144	92144-1721	SPRING,PAD		1	1			
92150	92150-1691	BOLT,HANGER		1	1			
92151	92151-1799	BOLT,DISC PLATE,6MM		4	4			
120	120CA0840	BOLT-SOCKET,8X40		2	2			

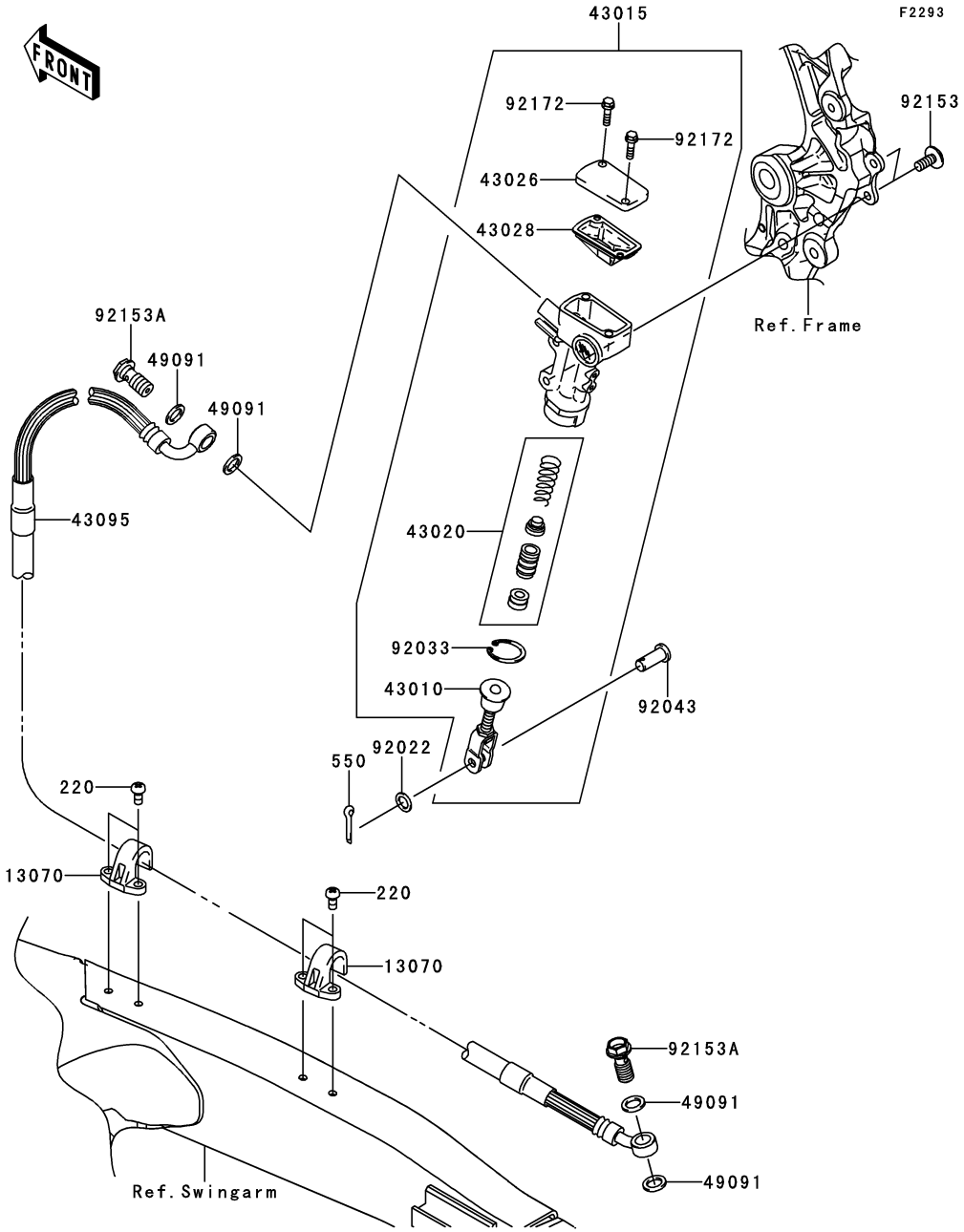

Ref. No.	Part No.	Description	Spec Code	Quantity-KX450 '13 FDF	'14 FEF			
13070	13070-0048	GUIDE,BRAKE HOSE		2	2			
43010	43010-1087	ROD-ASSY-BRAKE		1	1			
43015	43015-0168	CYLINDER-ASSY-MASTER,RR		1	1			
43020	43020-1094	PISTON-COMP-BRAKE		1	1			
43026	43026-0023	CAP-BRAKE		1	1			
43028	43028-1092	DIAPHRAGM		1	1			
43095	43095-0617	HOSE-BRAKE,L=555		1	1			
49091	49091-0001	WASHER-SEAL,10.1X14.5X1.5		4	4			
92022	92022-1028	WASHER,8.5X13X1		1	1			
92033	92033-0079	RING-SNAP,20.9X24.6X1.2		1	1			
92043	92043-0004	PIN		1	1			
92153	92153-1021	BOLT,SOCKET,6X14		2	2			
92153A	92153-1419	BOLT,OIL,L=23		2	2			
92172	92172-1064	SCREW		2	2			
220	220AA0510	SCREW-PAN-CROS,5X10		4	4			
550	550AA2015	PIN-COTTER,2.0X15		1	1			

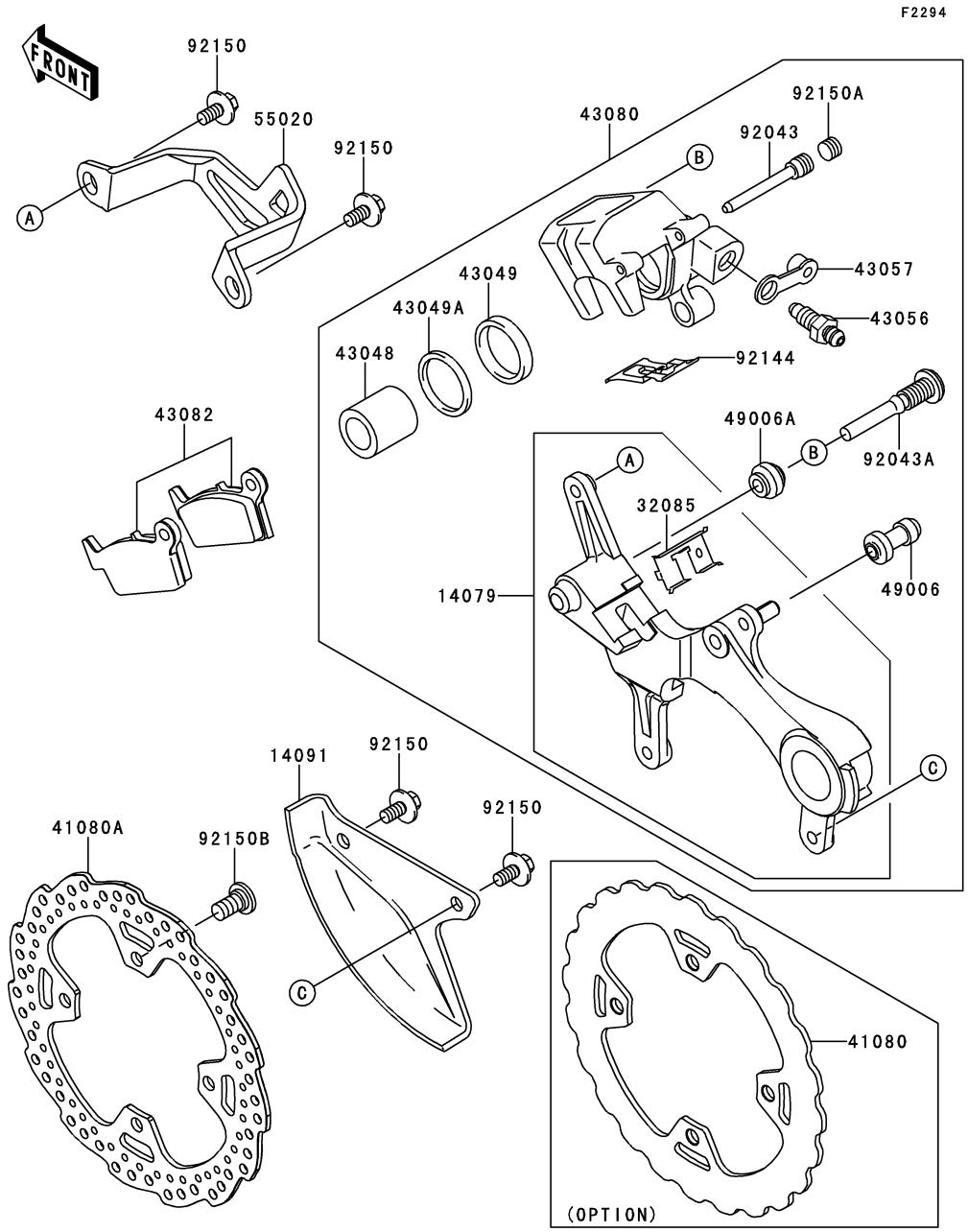

Ref. No.	Part No.	Description	Spec Code	Quantity-KX450 '13 FDF	'14 FEF			
14079	14079-0022	HOLDER-ASSY,REAR CALIPER		1	1			
14091	14091-1523-6C	COVER,REAR DISC,EBONY		1	1			
32085	32085-1386	STOPPER,PAD		1	1			
41080	41080-0094	DISC,RR		1	1			
	(OPTION)							
41080A	41080-0587	DISC,RR		1	1			
43048	43048-1066	PISTON-CALIPER		1	1			
43049	43049-1063	PACKING		1	1			
43049A	43049-1064	PACKING		1	1			
43056	43056-1055	BREATHER		1	1			
43057	43057-1001	CAP-BREATHER		1	1			
43080	43080-0037	CALIPER-SUB-ASSY,RR		1	1			
43082	43082-0107	PAD-ASSY-BRAKE		1	1			
49006	49006-1088	BOOT,CALIPER		1	1			
49006A	49006-1242	BOOT,CALIPER		1	1			
55020	55020-0458-6C	GUARD,REAR CALIPER,EBONY		1	1			
92043	92043-1507	PIN,HANGER		1	1			
92043A	92043-1508	PIN		1	1			
92144	92144-1819	SPRING,PAD		1	1			
92150	92150-1340	BOLT,6X14		4	4			
92150A	92150-1692	BOLT,PLUG		1	1			
92150B	92150-1811	BOLT,DISC PLATE,8X15		4	4			

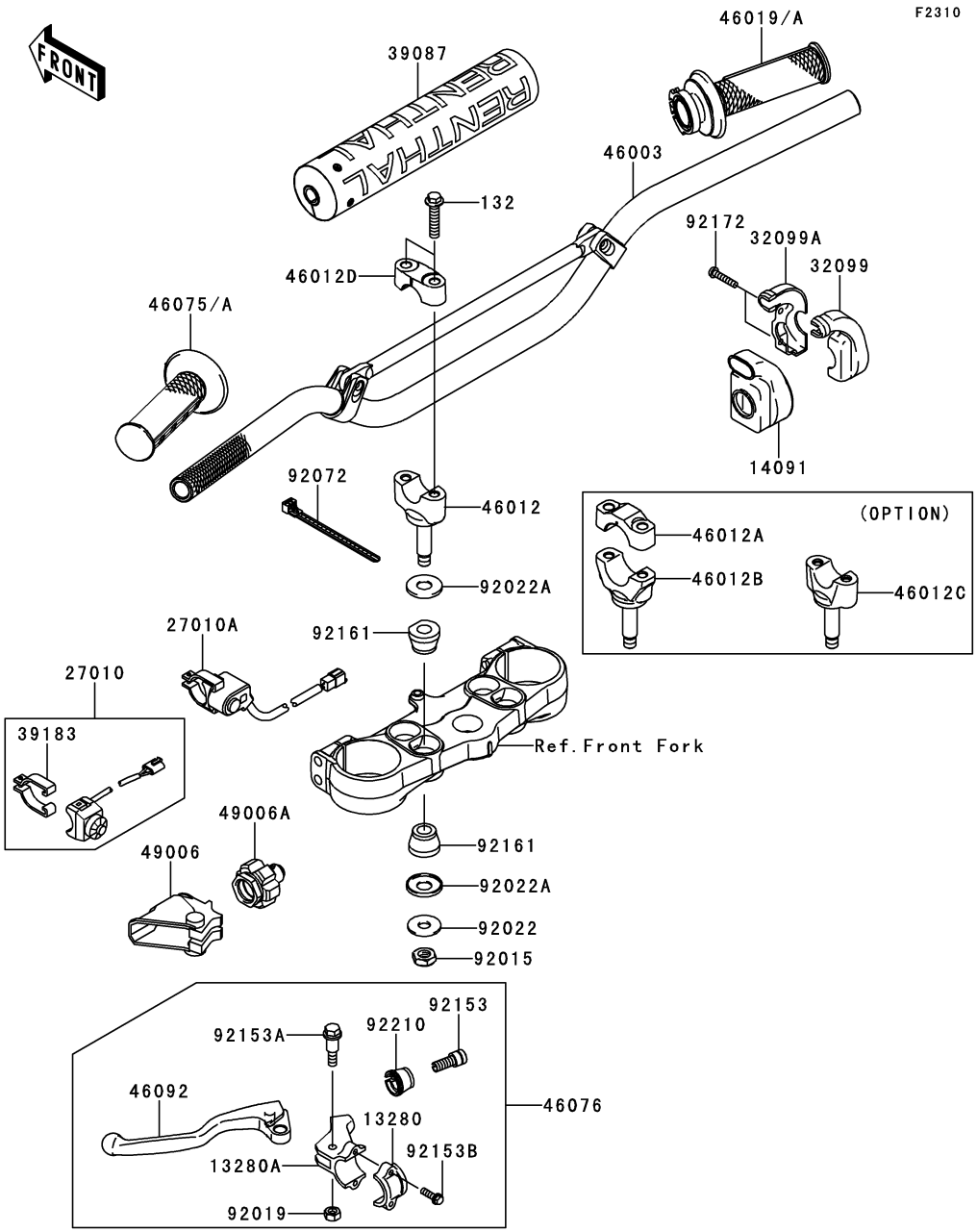

Ref. No.	Part No.	Description	Spec Code	Quantity-KX450 '13 FDF	'14 FEF			
13280	13280-0055	HOLDER		1	1			
13280A	13280-0118	HOLDER,CLUTCH LEVER		1	1			
14091	14091-0182	COVER,THROTTLE CASE		1	1			
27010	27010-0047	SWITCH,ENGINE STOP		1	1			
27010A	27010-0725	SWITCH,LAUNCH MODE		1	1			
32099	32099-0002	CASE,THROTTLE,RR		1	1			
32099A	32099-0003	CASE,THROTTLE,FR		1	1			
39087	39087-0004	PAD-HANDLE		1	1			
39183	39183-1059	BAND-ASSY,ENGINE STOP SWITCH		1	1			
46003	46003-0572	HANDLE,RENTHAL,K971		1	1			
46012	46012-0013-21	HOLDER-HANDLE,LWR,F.BLACK		2	2			
46012A	46012-0020-21 (OPTION)	HOLDER-HANDLE,UPP,FAT BAR,BLK		2	2			
46012B	46012-0021-21 (OPTION)	HOLDER-HANDLE,LWR,FAT BAR,BLK		2	2			
46012C	46012-0048-21 (OPTION)	HOLDER-HANDLE,LWR,F.BLACK		2	2			
46012D	46012-0324-21	HOLDER-HANDLE,UPP,F.BLACK		2	2			
46019	46019-0037	GRIP-ASSY,THROTTLE		1				
46019A	46019-0041	GRIP-ASSY,THROTTLE			1			
46075	46075-0072	GRIP,LH			1			
46075A	46075-0082	GRIP,LH		1				
46076	46076-0055	LEVER-ASSY-GRIP,CLUTCH		1	1			
46092	46092-0016	LEVER-GRIP,CLUTCH		1	1			
49006	49006-0030	BOOT,CLUTCH LEVER		1	1			
49006A	49006-0060	BOOT,CLUTCH CABLE		1	1			
92015	92015-1962	NUT,LOCK,10MM		2	2			
92019	92019-008	NUT,LOCK,6MM		1	1			
92022	92022-1088	WASHER,10.2X28X2		2	2			
92022A	92022-1737	WASHER		4	4			
92072	92072-1293	BAND,L=140		1	1			
92153	92153-0773	BOLT,BOLT ADJUSTING		1	1			
92153A	92153-0807	BOLT		1	1			
92153B	92153-0808	BOLT,5X16		2	2			
92161	92161-0929	DAMPER,HANDLE HOLDER		4	4			
92172	92172-0069	SCREW,5X20		2	2			
92210	92210-0167	NUT,BOLT WIRE ADJUSTING		1	1			
132	132BA0835	BOLT-FLANGED-SMALL,8X35		4	4			

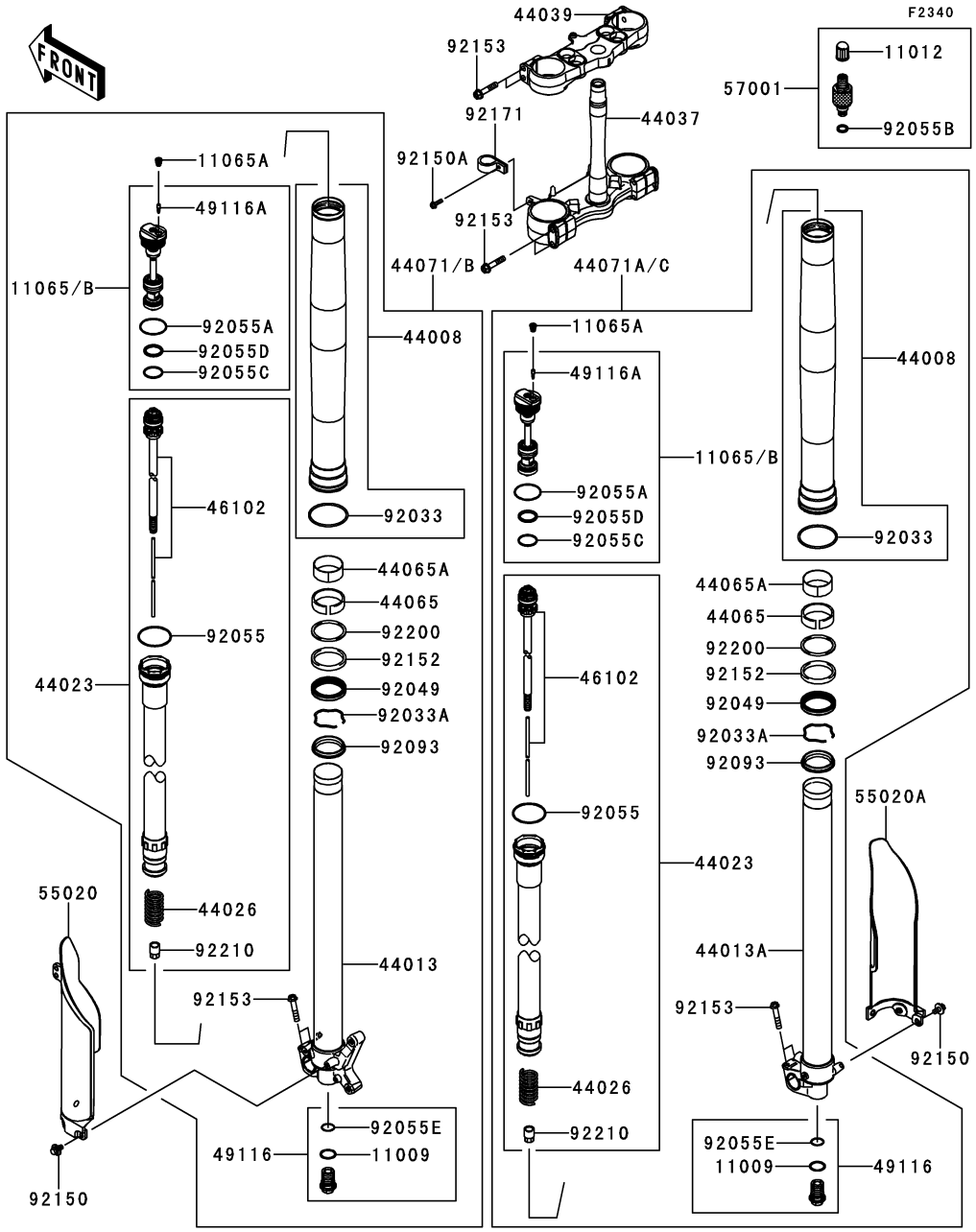

Ref. No.	Part No.	Description	Spec Code	Quantity-KX450 '13 FDF	Quantity-KX450 '14 FEF
11009	11009-1592	GASKET,FORK CYLINDER BOLT		2	2
11012	11012-1391	CAP,VALVE AIR		1	1
11065	11065-0766-KW	CAP,BLUE			
		L- -	AS	2	2
11065A	11065-0767	CAP		2	2
11065B	11065-0795-KW	CAP,BLUE			
		L- -	EU	2	2
44008	44008-0056	PIPE-FORK OUTER		2	2
44013	44013-0183	PIPE-FORK INNER,LH		1	1
44013A	44013-0184	PIPE-FORK INNER,RH		1	1
44023	44023-0105	CYLINDER-SET-FORK		2	2
44026	44026-0169	SPRING-FRONT FORK		2	2
44037	44037-0134-21	HOLDER-FORK UNDER,F.BLACK		1	1
44039	44039-0109-21	HOLDER-FORK UPPER,F.BLACK		1	1
44065	44065-0021	BUSHING-FRONT FORK		2	2
44065A	44065-0022	BUSHING-FRONT FORK		2	2
44071	44071-0843	DAMPER-ASSY,FORK,LH			
		L- -	AS	1	1
44071A	44071-0844	DAMPER-ASSY,FORK,RH			
		L- -	AS	1	1
44071B	44071-0874	DAMPER-ASSY,FORK,LH			
		L- -	EU	1	1
44071C	44071-0875	DAMPER-ASSY,FORK,RH			
		L- -	EU	1	1
46102	46102-0581	ROD		2	2
49116	49116-0020	VALVE-ASSY		2	2
49116A	49116-0034	VALVE-ASSY		2	2
55020	55020-0441-6C	GUARD,FORK,LH,EBONY		1	1
55020A	55020-0442-6C	GUARD,FORK,RH,EBONY		1	1
57001	57001-0725	TOOL-SPECIAL,KYB		1	1
92033	92033-0075	RING-SNAP		2	2
92033A	92033-1329	RING-SNAP		2	2
92049	92049-0737	SEAL-OIL		2	2
92055	92055-0104	RING-O		2	2
92055A	92055-0106	RING-O		2	2
92055B	92055-0747	RING-O		1	1
92055C	92055-0759	RING-O		2	2
92055D	92055-1135	RING-O,FORK SPRING SEAT		2	2
92055E	92055-1156	RING-O		2	2
92093	92093-1566	SEAL,FORK OUTER TUBE		2	2
92150	92150-1340	BOLT,6X14		6	6

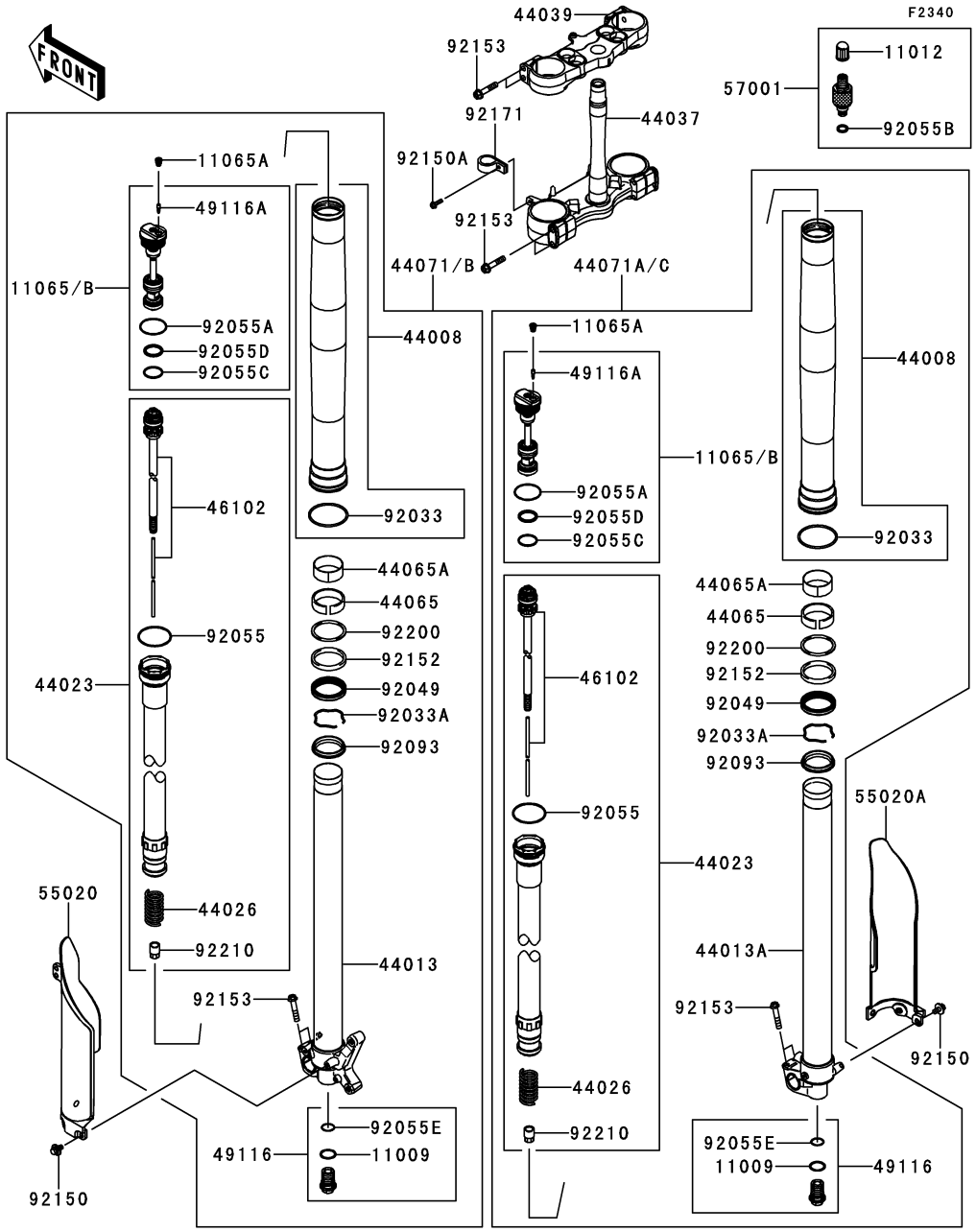

Ref. No.	Part No.	Description	Spec Code	Quantity-KX450 '13 FDF	'14 FEF			
92150A	92150-1802	BOLT,5X16		1	1			
92152	92152-0824	COLLAR		2	2			
92153	92153-0020	BOLT,8X40		12	12			
92171	92171-0820	CLAMP		1	1			
92200	92200-0532	WASHER		2	2			
92210	92210-0337	NUT		2	2			

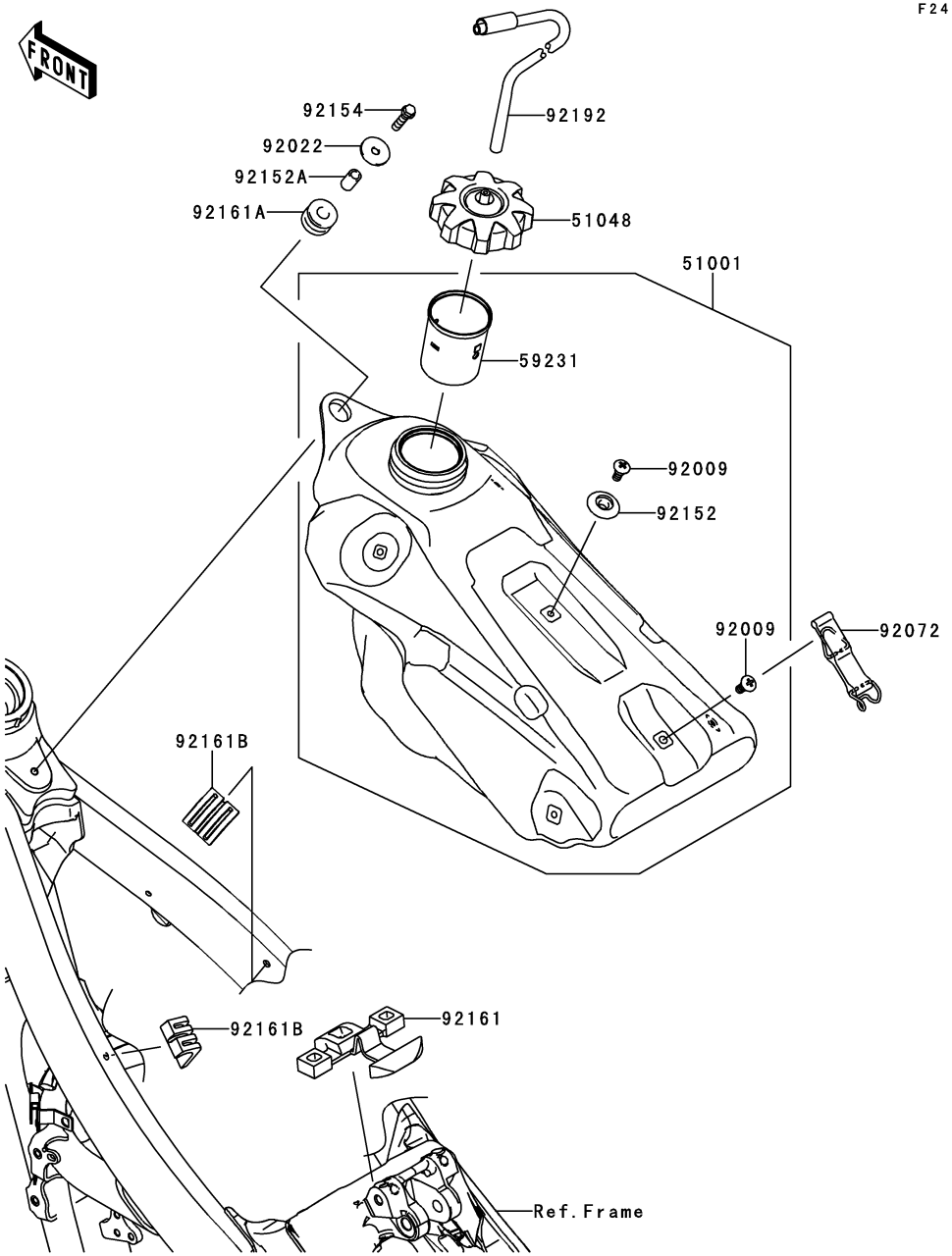

F2410

Ref. No.	Part No.	Description	Spec Code	Quantity-KX450 '13 FDF	'14 FEF			
51001	51001-0412	TANK-COMP-FUEL		1	1			
51048	51048-0031	CAP-ASSY-TANK,FUEL		1	1			
59231	59231-0019	FILLER		1	1			
92009	92009-1971	SCREW,6MM		2	2			
92022	92022-1690	WASHER,6.5X24X2		1	1			
92072	92072-0045	BAND,FUEL TANK		1	1			
92152	92152-1346	COLLAR		1	1			
92152A	92152-1552	COLLAR,6.8X10X16		1	1			
92154	92154-0520	BOLT,FLANGED,6X25		1	1			
92161	92161-1377	DAMPER,FUEL TANK,RR		1	1			
92161A	92161-1392	DAMPER,FUEL TANK,FR		1	1			
92161B	92161-1393	DAMPER,FUEL TANK,SIDE		2	2			
92192	92192-0161	TUBE		1	1			

F2510

Ref. No.	Part No.	Description	Spec Code	Quantity-KX450 '13 FDF	'14 FEF			
53066	53066-0357-336	SEAT-ASSY,GREEN/BLACK		1	1			
92154	92154-0547	BOLT,FLANGED,8X16		2	2			

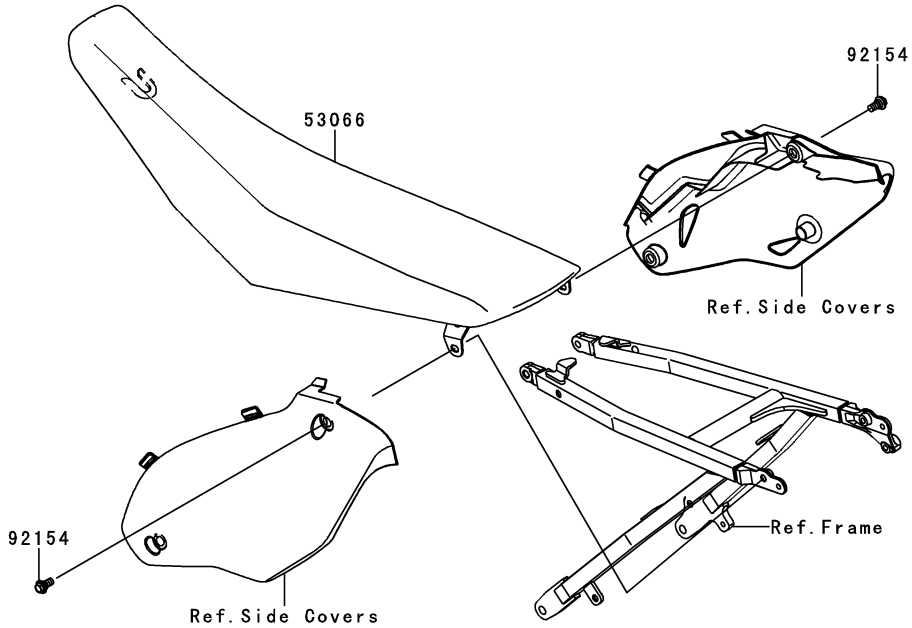

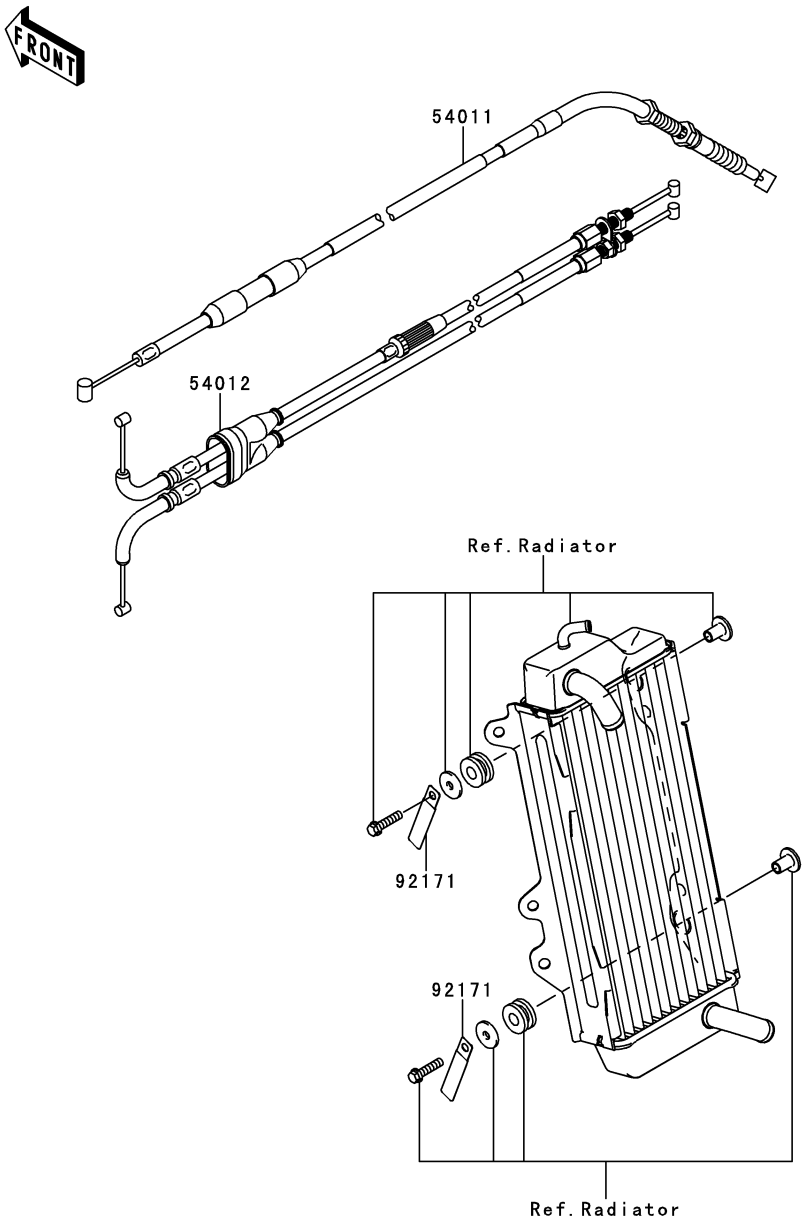

F2540

Ref. No.	Part No.	Description	Spec Code	Quantity-KX450 '13 FDF	'14 FEF			
54011	54011-0095	CABLE-CLUTCH		1	1			
54012	54012-0579	CABLE-THROTTLE		1	1			
92171	92171-0652	CLAMP		2	2			

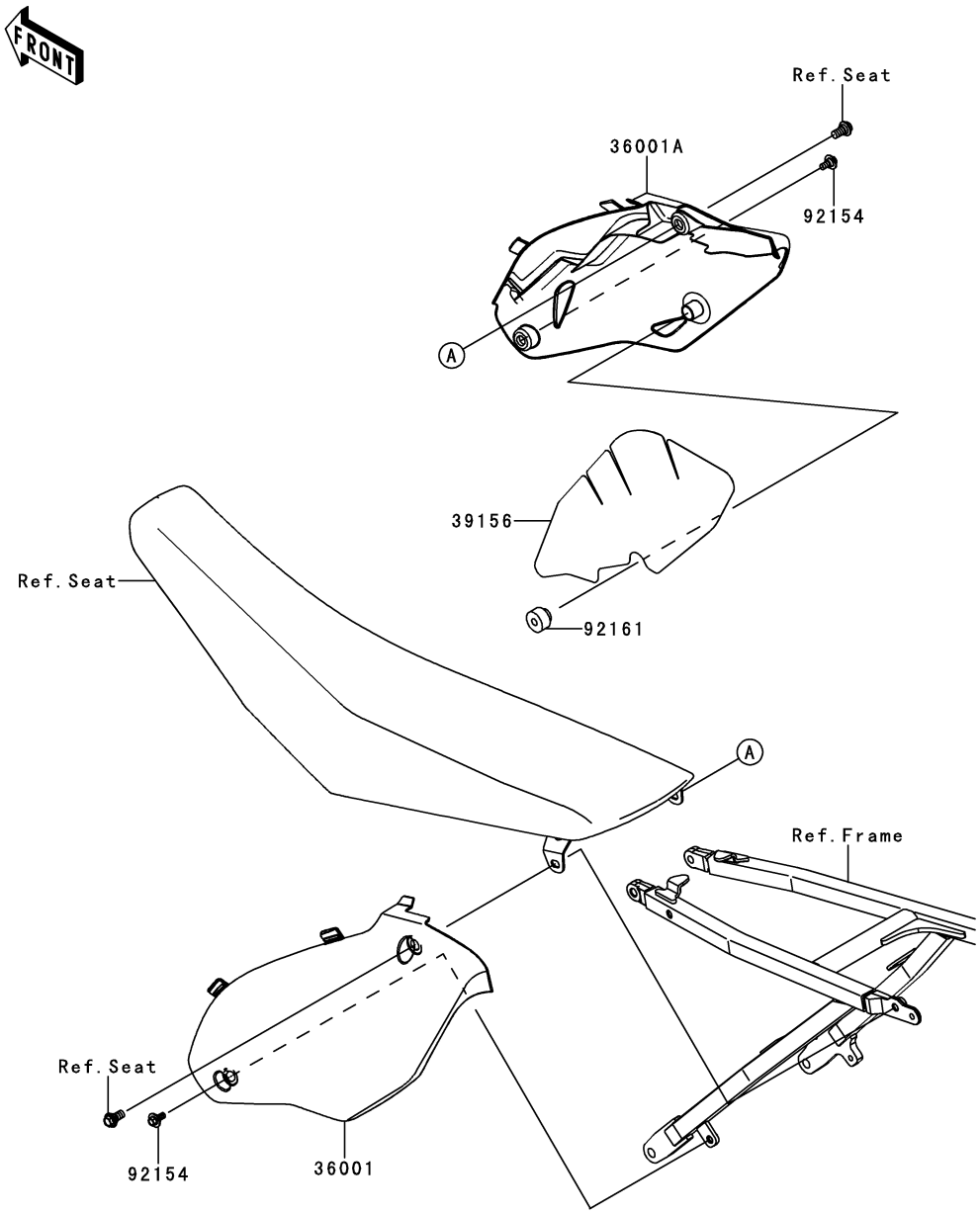

Ref. No.	Part No.	Description	Spec Code	Quantity-KX450 '13 FDF	'14 FEF			
36001	36001-0220-266	COVER-SIDE,LH,B.WHITE		1	1			
36001A	36001-0222-266	COVER-SIDE,RH,B.WHITE		1	1			
39156	39156-0677	PAD,SIDE COVER,RH		1	1			
92154	92154-0546	BOLT,FLANGED,6X9		2	2			
92161	92161-0073	DAMPER		1	1			

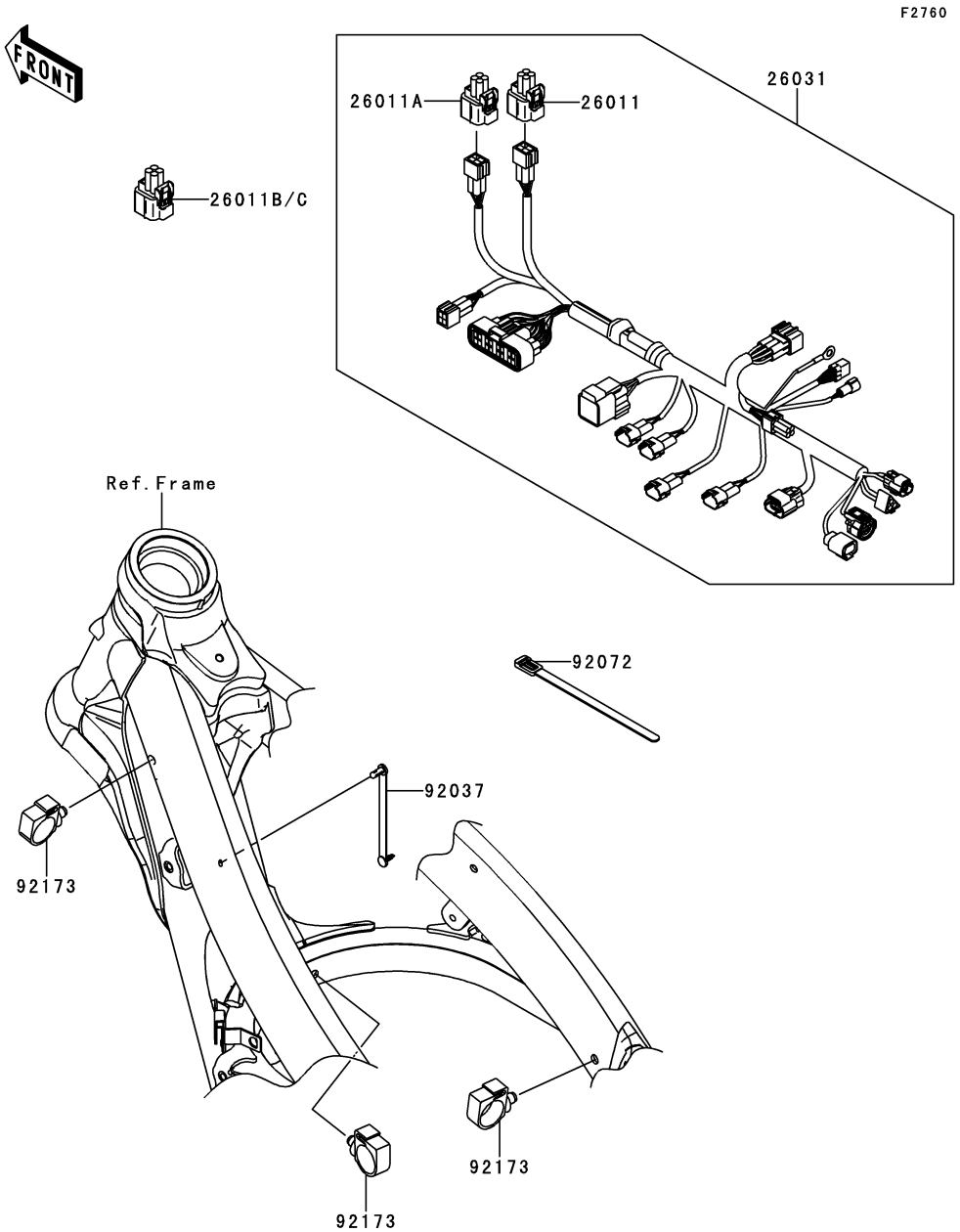

Ref. No.	Part No.	Description	Spec Code	Quantity-KX450 '13 FDF	'14 FEF			
26011	26011-0273	WIRE-LEAD,NATURAL		1	1			
26011A	26011-0727	WIRE-LEAD,GREEN		1	1			
26011B	26011-0728	WIRE-LEAD,MODE SELECT,BLACK		1	1			
26011C	26011-0748	WIRE-LEAD,MODE SELECT,WHITE		1	1			
26031	26031-1357	HARNESS,MAIN		1	1			
92037	92037-1903	CLAMP,SPEED,L=80.5		1	1			
92072	92072-1293	BAND,L=140		1	1			
92173	92173-0861	CLAMP		3	3			

F2810

Ref. No.	Part No.	Description	Spec Code	Quantity-KX450 '13 FDF	'14 FEF			
92104	92104-0004	GASKET-LIQUID,TB1211F,CLEAR		1	1			
92104A	92104-1063	GASKET-LIQUID,TB1216,GRAY		1	1			
92104B	92104-1064	GASKET-LIQUID,TB1216B,BLACK		1	1			
92110	92110-0004	TOOL-WRENCH,NIPPLE,6X8		1	1			
92110A	92110-0005	TOOL-WRENCH,BOX,16MM		1	1			

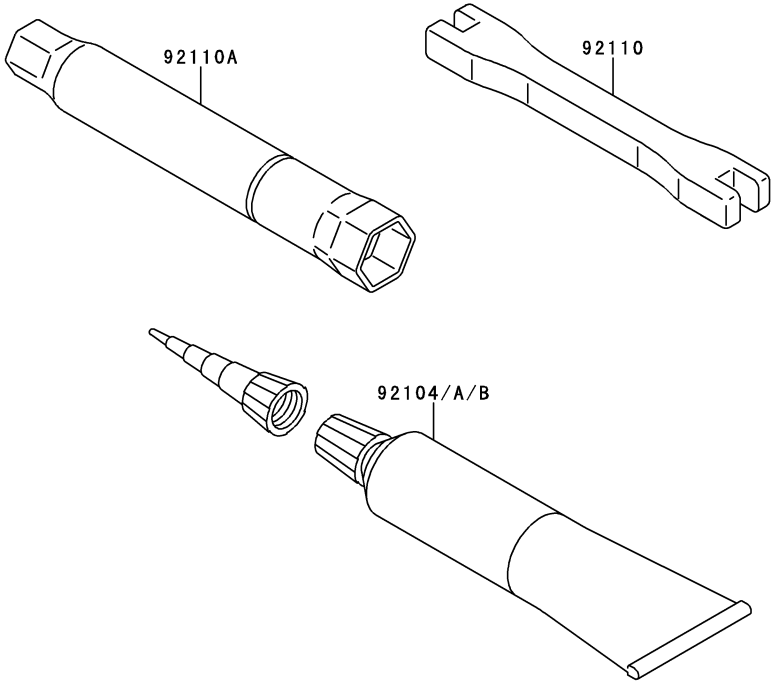

F2860

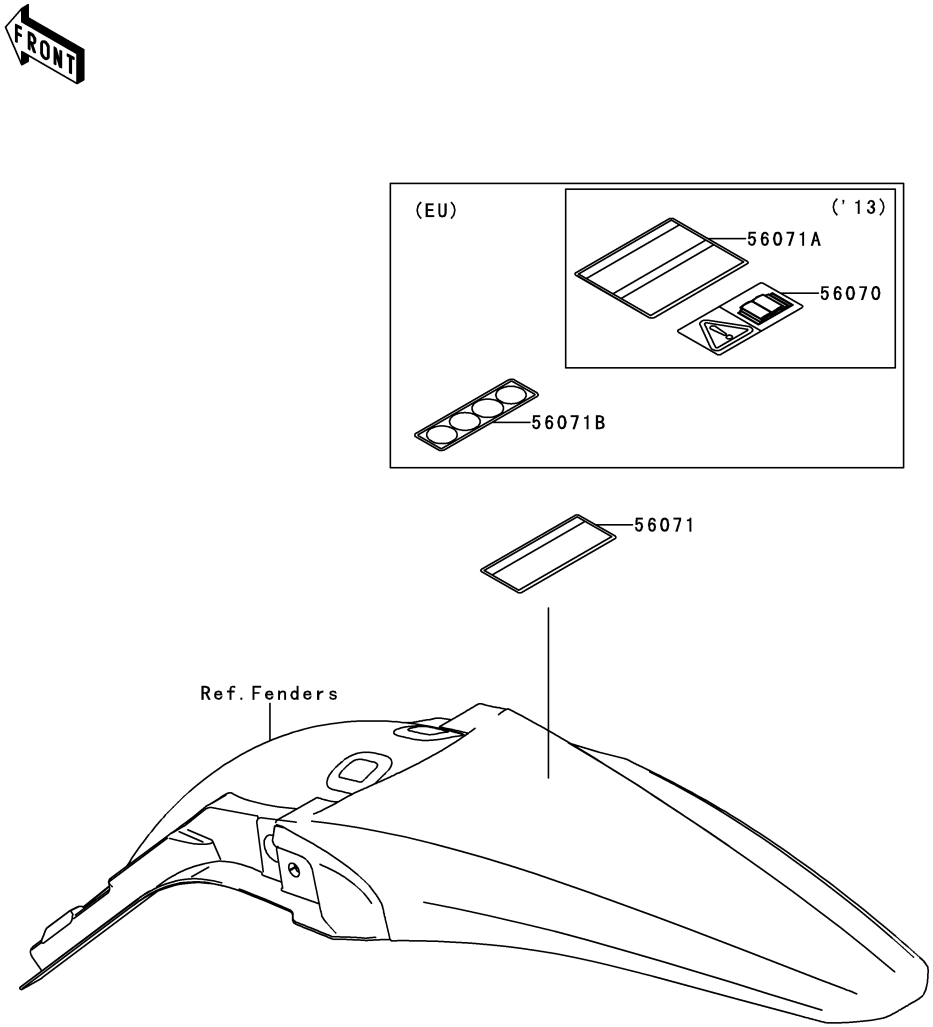

Ref. No.	Part No.	Description	Spec Code	Quantity-KX450 '13 FDF	'14 FEF			
56070	56070-3799	LABEL-WARNING,OWNER'S MANUAL						
	L- -		EU	1				
56071	56071-0028	LABEL-WARNING,IMPORTANT NOTICE						
	L- -		AS	1	1			
56071A	56071-0029	LABEL-WARNING,IMPORTANT NOTICE						
	L- -		EU	1				
56071B	56071-0416	LABEL-WARNING,RACE ONLY						
	L- -		EU		1			

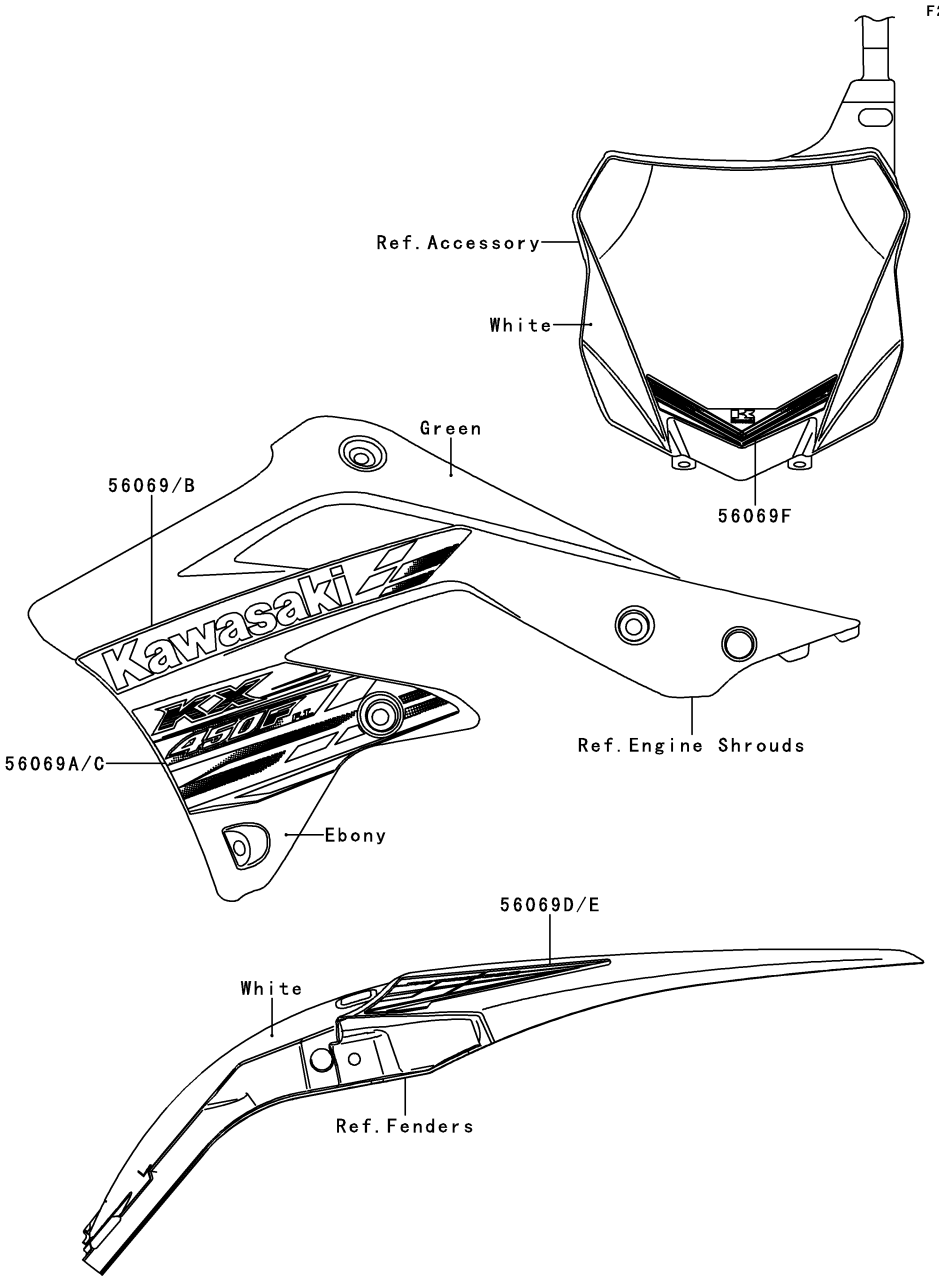

Ref. No.	Part No.	Description	Spec Code	Quantity-KX450 '13 FDF	'14 FEF			
56069	56069-2461	PATTERN,SHROUD,UPP,LH		1				
56069A	56069-2462	PATTERN,SHROUD,LWR,LH		1				
56069B	56069-2463	PATTERN,SHROUD,UPP,RH		1				
56069C	56069-2464	PATTERN,SHROUD,LWR,RH		1				
56069D	56069-2465	PATTERN,RR FENDER,LH		1				
56069E	56069-2466	PATTERN,RR FENDER,RH		1				
56069F	56069-2467	PATTERN,NUMBER PLATE		1				

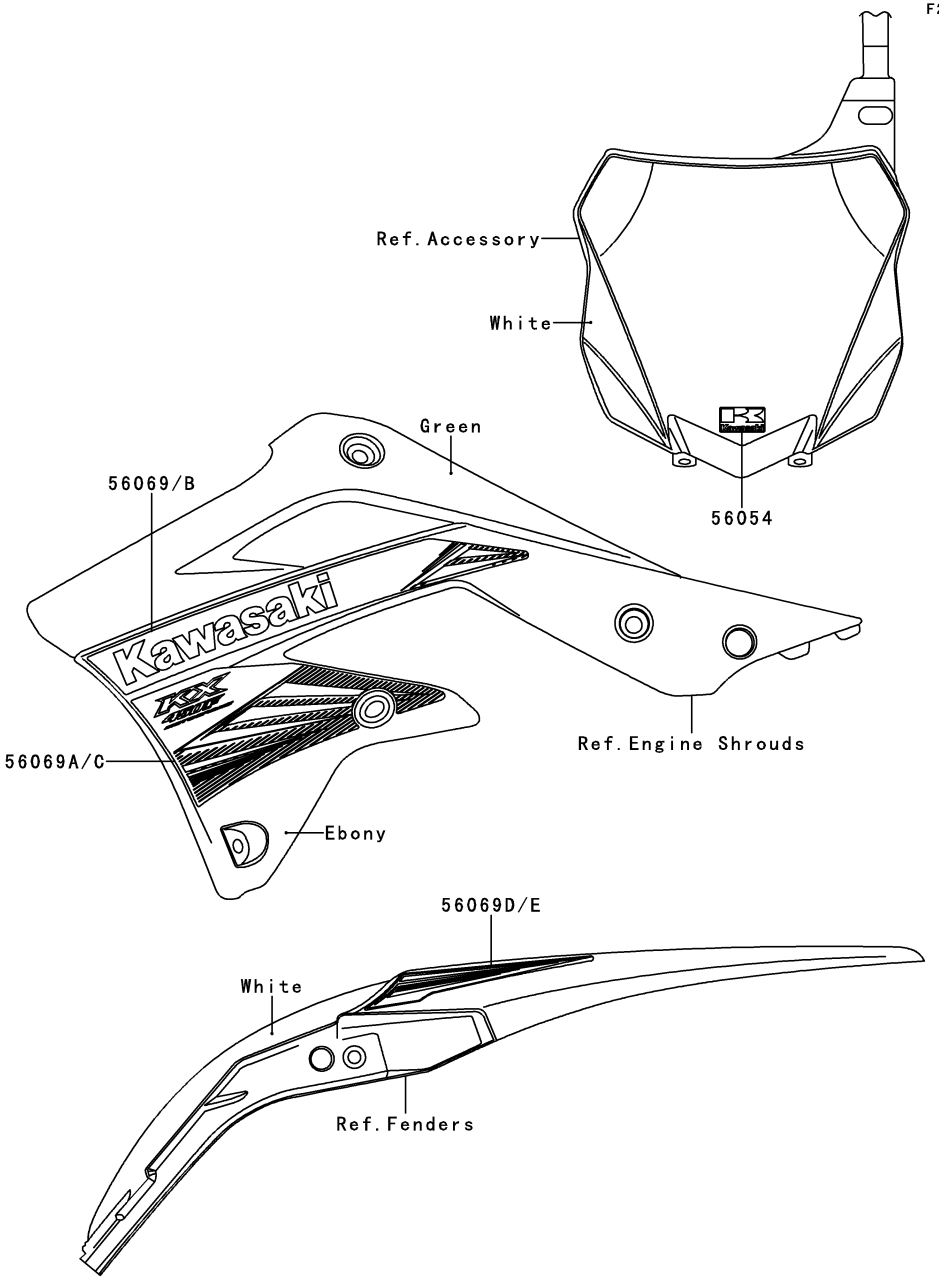

Ref. No.	Part No.	Description	Spec Code	Quantity-KX450 '13 FDF	'14 FEF			
56054	56054-1282	MARK,NUMBER PLATE		1				
56069	56069-4012	PATTERN,SHROUD,UPP,LH		1				
56069A	56069-4013	PATTERN,SHROUD,LWR,LH		1				
56069B	56069-4014	PATTERN,SHROUD,UPP,RH		1				
56069C	56069-4015	PATTERN,SHROUD,LWR,RH		1				
56069D	56069-4016	PATTERN,RR FENDER,LH		1				
56069E	56069-4017	PATTERN,RR FENDER,RH		1				

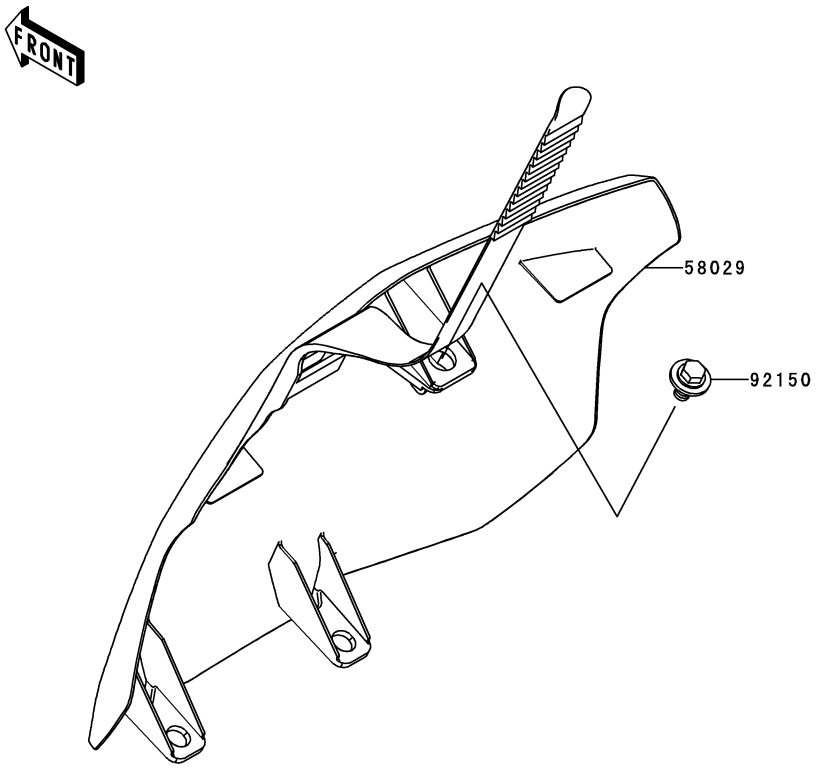

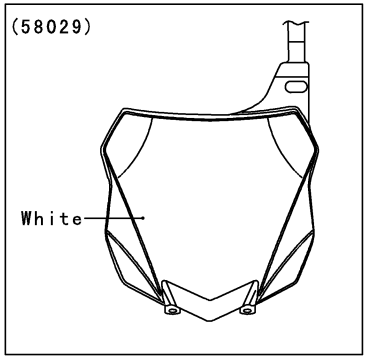

WOD

F2910

Ref. No.	Part No.	Description	Spec Code	Quantity-KX450 '13 FDF	'14 FEF			
58029	58029-0056-266	PLATE-NUMBER,B.WHITE		1	1			
92150	92150-1435	BOLT,6X12		1	1			

F2920

Owner's Manual
(Local Procurement)

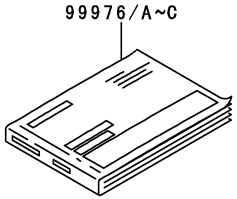

Ref. No.	Language
(99976/B)	English
	French
	German
(99976A/C)	Italian
	Spanish
	Dutch

Service Manual

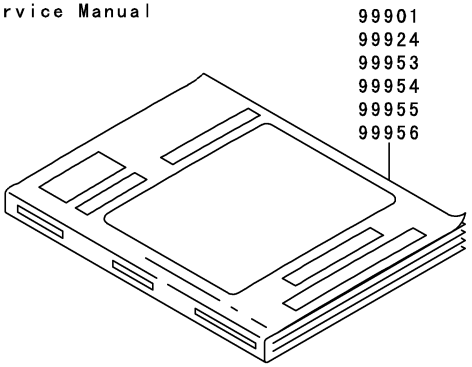

Ref. No.	Language
(99901)	Dutch
(99924)	English
(99953)	German
(99954)	French
(99955)	Italian
(99956)	Spanish

Ref. No.	Part No.	Description	Spec Code	Quantity-KX450 '13 FDF	'14 FEF			
99901	99901-0031-03	SERVICE MANUAL,DUTCH						
	L----------		EU	1	1			
99924	99924-1448-03	SERVICE MANUAL,ENGLISH						
	L----------		EU	1	1			
99953	99953-1069-03	SERVICE MANUAL,GERMAN						
	L----------		EU	1	1			
99954	99954-1082-03	SERVICE MANUAL,FRENCH						
	L----------		EU	1	1			
99955	99955-1058-03	SERVICE MANUAL,ITALIAN						
	L----------		EU	1	1			
99956	99956-1045-03	SERVICE MANUAL,SPANISH						
	L----------		EU	1	1			
99976	99976-1718	OWNER'S MANUAL,EN/FR/DE						
	L----------		EU	1				
99976A	99976-1719	OWNER'S MANUAL,IT/ES/NL						
	L----------		EU	1				
99976B	99976-1807	OWNER'S MANUAL,EN/FR/DE						
	L----------		EU		1			
99976C	99976-1808	OWNER'S MANUAL,IT/ES/NL						
	L----------		EU		1			

Part No.	Grid No.
11004-0088	B-3
11005-0132	B-5
11008-0173	B-3
11009-1592	F-8
11011-0744-6C	B-6
11012-1391	F-8
11013-0722	B-6
11056-0070	E-4
11056-0071	E-4
11056-0072	E-4
11056-0624	E-4
11056-2219	E-4
11060-1300	B-3
11061-0079	B-4
11061-0082	B-7
11061-0225	C-13
11061-0259	C-5
11061-0260	B-9
11061-0351	B-4
11061-0434	B-7
11061-0452	C-5
11061-0453	C-5
11061-0768	B-5
11061-0852	C-5
11061-0853	C-5
11065-0107	C-10
11065-0338	E-14
11065-0350	E-11
11065-0766-KW	F-8
11065-0767	F-8
11065-0795-KW	F-8
11065-1253	E-12
12004-0034	B-8
12005-0049	B-8
12009-0008	B-8
12011-1003	B-8
12032-0702	B-8
12046-0071	B-9
12048-0021	B-9
12053-0031	B-9
12053-0051	B-9
12053-0125	E-5
12053-0135	B-9
12053-0136	B-9
12053-0187	C-5
12053-0192	E-5
120CA0635	B-3
120CA0635	B-5
120CA0840	F-4
13001-0736	B-5
13002-0028	B-5
13008-0555	B-5
13031-0133	B-10
13032-0067	B-10
13034-0017	B-10
13035-0018	B-10
13037-0159	B-10
13037-0160	B-10
13041-0023	B-10
13041-0026	B-10
13042-0005	B-9
13061-0146	B-11
13064-0051	B-11
13066-0010	B-11
13070-0048	F-5
13070-0095	E-14
13070-0101	E-14
13070-1378	B-11
13078-0012	C-3
13078-0558	B-11
13087-0015	B-12
13088-0010	B-12
13088-0051	B-12
13089-1005	B-12
13089-1010	B-12
13089-1095	B-12
13095-0122	B-12
13097-0013	B-10
130BA0512	B-6
130BA0514	C-11
13102-0035	B-12
13107-0056	C-9
13107-0134	C-9
13107-0135	C-13
13116-0013	B-12
13116-0043	F-3
13127-0088	B-13
13128-0668	B-13
13140-0043	B-14
13140-0044	B-14
13141-0064	B-14
13144-0063	B-13
13145-0031	B-14
13151-0047	B-14
13156-0156	C-3
13161-0081	C-3
13165-0018	C-3
13187-0018	B-12
13206-0007	B-11
13234-0036	C-9
13236-0190	C-3
13236-0202	E-13
13236-0724	F-3
13256-0006	E-14
13262-0847	B-13
13262-0848	B-13
13262-0849	B-13
13262-0850	B-13
13262-0851	B-13
13262-0852	B-13
13262-0853	B-13
13262-0854	B-13
13262-0855	B-13
13271-0334	C-4
13271-0345	C-4
13271-0730	B-6
13271-0893	C-3
13272-1169	E-5
13280-0055	F-7
13280-0118	F-7
13280-0170	B-6
13280-0351	B-12
13280-0751	B-6
132BA0608	C-13
132BA0608	C-4
132BA0610	E-4
132BA0610	E-5
132BA0614	C-3
132BA0614	E-4
132BA0614	E-8
132BA0616	B-11
132BA0616	B-3
132BA0616	C-10
132BA0616	C-9
132BA0616	F-3
132BA0618	C-12
132BA0620	C-9
132BA0630	C-5
132BA0640	C-10
132BA0660	C-5
132BA0680	C-10
132BA0835	F-7
132BA0840	B-7
132BB0625	C-14
14001-0162	C-4
14001-0601	C-4
14013-0001	B-9
14026-0065	C-5
14031-0567	C-5
14032-0117	C-5
14032-0571	C-5
14037-0117-6C	C-14
14037-0118-6C	C-14
14044-0038	B-12
14073-0726	B-6
14079-0022	F-6
14079-0043	F-4
14091-0182	F-7
14091-1523-6C	F-6
14091-1631	B-4
14091-1815	C-6
16007-0022	B-8
16016-0023	C-6
16065-0068	B-3
16073-3707	C-6
16130-1058	C-9
16142-0029	C-13
16142-0042	C-9
16142-0062	C-9
16154-0069	C-9
16163-0734	C-6
172BA0618	C-3
18046-0568	B-7
18046-0579	B-7
18088-0609	B-7
18100-0564	B-7
21003-0082	C-11
21003-0148	C-11
21007-0122	C-11
21007-0138	C-11
21007-0139	C-11
21007-0594	C-11
21013-0001	C-11
21066-0721	C-11
21121-0707	C-12
21160-0014	C-12
21175-0802	C-8
21175-0883	C-8
21176-0009	C-8
21176-0058	C-6
21176-0066	C-8
21176-0121	C-8
21176-0129	C-6
220AA0510	F-5
26011-0246	C-8
26011-0273	F-14
26011-0727	F-14
26011-0728	F-14
26011-0748	F-14
26031-1357	F-14
27010-0047	F-7
27010-0725	F-7
290CA0808	B-11
31064-0623	B-7
311BA0600	C-3
32054-0054	E-7
32054-0055	E-7
32085-1361	F-4
32085-1386	F-6
32099-0002	F-7
32099-0003	F-7
32155-0112	C-6
32160-0543	E-3
32160-0636	E-3
32190-0386	E-4
32190-0463	E-4
32190-0464	E-4
33001-0594	E-5
33032-0012	E-5
33040-0020	E-5
33040-0075	E-5
34024-0074	E-9
34028-0104	E-7
34028-0105	E-7
35004-0319-290	E-8
35019-0050	E-8
35023-0357-266	E-8
35063-0647	C-6
36001-0220-266	F-13
36001-0222-266	F-13
39007-0182	E-6
39061-0218	C-14
39061-0571	C-14
39062-0088	D-4
39062-0301	D-4
39062-0302	D-4
39062-0303	D-4
39062-0348	D-4
39062-0349	D-4
39062-0350	D-4
39087-0004	F-7
39111-0086	E-6
39111-0310	E-6
39156-0677	F-13
39156-0829	B-6
39156-0830	E-8
39183-1059	F-7
39193-0027	B-3
41009-0236	E-10
41009-0253	E-10
41022-1107	E-10
41022-1140	E-10
41023-1009	E-10
41023-1081	E-10
41024-009	E-10
41024-010	E-10
41025-0094-WC	E-10
41025-0095-WC	E-10
41029-0003	E-10
41029-1204	E-10
41029-1330	E-10
41032-0002	E-10
41032-1077	E-10
41032-1085	E-10
41032-1086	E-10
41034-0034	E-11
41034-0057	E-12
41068-0004	E-11
41068-1466	E-12
41080-0094	F-6
41080-0193	F-4
41080-0568	F-4
41080-0587	F-6
41090-0080-WC	E-10
41090-0081-WC	E-10
410AA0800	E-12
411S0600	B-7
42036-0019	E-5
42036-0020	E-6
42036-0021	E-6
42036-0022	E-6
42036-0030	E-6
42036-1351	E-6
42041-0001	E-12
42041-1383	E-12
42041-1384	E-12
42041-1408	E-12
42041-1428	E-12
42041-1429	E-12
42041-1448	E-12
42041-1449	E-12
42041-1450	E-12
42041-1451	E-12
43010-1087	F-5
43015-0168	F-5
43015-0579	F-3
43020-1094	F-5
43020-1115	F-3
43022-1010	F-3
43026-0020	F-3

Part No.	Grid No.
43026-0023	F-5
43028-1067	F-3
43028-1092	F-5
43034-1110	F-3
43048-1066	F-6
43048-1093	F-4
43049-1060	F-4
43049-1061	F-4
43049-1063	F-6
43049-1064	F-6
43056-1055	F-4
43056-1055	F-6
43057-1001	F-4
43057-1001	F-6
43078-0555	E-14
43080-0037	F-6
43080-0081	F-4
43082-0107	F-6
43082-0132	F-4
43089-0055-KW	E-14
43095-0617	F-5
43095-0755	F-3
44008-0056	F-8
44013-0183	F-8
44013-0184	F-8
44023-0105	F-8
44026-0169	F-8
44037-0134-21	F-8
44039-0109-21	F-8
44065-0021	F-8
44065-0022	F-8
44071-0843	F-8
44071-0844	F-8
44071-0874	F-8
44071-0875	F-8
45014-0390-23N	E-14
45014-0403-23N	E-14
46003-0572	F-7
46012-0013-21	F-7
46012-0020-21	F-7
46012-0021-21	F-7
46012-0048-21	F-7
46012-0324-21	F-7
46019-0037	F-7
46019-0041	F-7
46075-0072	F-7
46075-0082	F-7
46076-0055	F-7
46092-0016	F-7
46102-0580	E-14
46102-0581	F-8
46102-0585	E-14
461S0600	B-7
480J1000	C-13
480J1800	B-11
480J1900	B-11
480J3200	B-10
481J2000	C-5
481J2100	C-4
482J5000	B-9
49002-0020	B-3
49006-0030	F-7
49006-0060	F-7
49006-0078	F-3
49006-1088	F-4
49006-1088	F-6
49006-1242	F-4
49006-1242	F-6
49016-1044	F-3
49033-0010	C-6
49040-0711	C-7
49047-0017	B-14
49047-0028	B-14
49065-0019	C-10
49065-0022	C-10
49078-0018	B-8
49078-0043	B-8
49085-1070	C-14
49085-1078	C-14
49089-0779-25M	D-3
49089-0780-25M	D-3
49091-0001	F-3
49091-0001	F-5
49107-0159	B-7
49116-0020	F-8
49116-0034	F-8
49118-0132	B-9
49118-0133	B-9
51001-0412	F-10
51044-0116	C-7
51048-0031	F-10
510A3200	C-11
52005-0019	C-5
52010-1053	C-10
53066-0357-336	F-11
54011-0095	F-12
54012-0579	F-12
55020-0434-6C	E-4
55020-0440-6C	E-4
55020-0441-6C	F-8
55020-0442-6C	F-8
55020-0458-6C	F-6
550AA2015	F-5
550AA3035	E-12
550S3020	E-7
56054-1282	G-6
56069-2461	G-5
56069-2462	G-5
56069-2463	G-5
56069-2464	G-5
56069-2465	G-5
56069-2466	G-5
56069-2467	G-5
56069-4012	G-6
56069-4013	G-6
56069-4014	G-6
56069-4015	G-6
56069-4016	G-6
56069-4017	G-6
56070-3799	G-4
56071-0028	G-4
56071-0029	G-4
56071-0416	G-4
57001-0725	F-8
58029-0056-266	G-7
59006-0011	B-6
59051-0030	B-11
59051-0044	C-9
59051-0045	C-9
59051-0046	B-11
59051-0070	B-10
59051-0071	B-10
59051-0087	B-10
59071-0071	C-6
59231-0019	F-10
59256-0003	C-13
600A0800	B-11
610A0408	B-14
610A0408	C-13
610A0408	C-5
610A0408	C-9
670B2012	E-13
670D1507	C-4
670D1508	C-4
670D2010	B-9
670D2010	C-10
670E5070	C-7
92002-1736	E-3
92004-0025	B-3
92005-0014	C-5
92005-0018	B-3
92005-0066	D-4
92005-0067	D-4
92009-1571	B-14
92009-1795	F-3
92009-1971	F-10
92009-1981	C-6
92009-1993	E-8
92015-1014	E-5
92015-1259	B-6
92015-1339	E-4
92015-1402	B-7
92015-1426	B-10
92015-1426	C-11
92015-1432	E-4
92015-1433	E-6
92015-1528	F-3
92015-1725	B-12
92015-1791	E-3
92015-1861	E-3
92015-1962	F-7
92015-1963	B-13
92019-008	E-4
92019-008	F-7
92022-1028	F-5
92022-1088	F-7
92022-1356	B-10
92022-161	B-3
92022-1690	F-10
92022-1737	F-7
92022-1814	F-3
92022-1827	C-3
92022-1829	E-7
92022-1868	B-12
92022-1885	B-11
92022-1944	B-11
92022-250	E-3
92022-271	B-11
92022-304	C-13
92022-304	C-4
92025-1870	B-8
92025-1871	B-8
92025-1872	B-8
92025-1873	B-8
92025-1874	B-8
92025-1875	B-8
92025-1876	B-8
92025-1877	B-8
92025-1878	B-8
92025-1879	B-8
92025-1880	B-8
92025-1881	B-8
92025-1882	B-8
92025-1883	B-8
92025-1884	B-8
92025-1885	B-8
92025-1886	B-8
92025-1887	B-8
92025-1888	B-8
92025-1889	B-8
92025-1890	B-8
92025-1982	B-8
92025-1983	B-8
92025-1984	B-8
92025-1985	B-8
92026-0064	C-5
92026-0156	C-3
92027-1653	B-7
92028-1857	B-13
92033-0019	C-9
92033-0044	E-14
92033-0059	E-14
92033-0075	F-8
92033-0079	F-5
92033-1041	E-12
92033-1172	B-13
92033-1329	F-8
92036-008	B-5
92037-1903	F-14
92037-1993	C-5
92042-007	B-3
92042-007	C-5
92043-0004	F-5
92043-0074	E-7
92043-1262	C-5
92043-1506	C-4
92043-1507	F-6
92043-1508	F-6
92043-1654	B-14
92043-1676	C-3
92043-4009	B-3
92043-4009	B-5
92045-0035	C-4
92045-0036	C-4
92045-0037	C-4
92045-0038	C-4
92045-0039	C-5
92045-0057	C-4
92045-0060	E-4
92045-0062	C-4
92045-0074	C-4
92045-0132	C-4
92045-1284	E-11
92045-1432	C-4
92045-1446	E-12
92046-0034	C-4
92046-1148	C-4
92046-1151	E-6
92046-1174	E-5
92046-1190	B-12
92046-1221	C-4
92046-1240	E-5
92046-1301	E-14
92046-1301	E-6
92049-0030	C-4
92049-0040	C-5
92049-0041	C-5
92049-0063	E-6
92049-0069	E-6
92049-0116	E-14
92049-0134	C-5
92049-0737	F-8
92049-1062	B-8
92049-1387	B-11
92049-1403	E-11
92049-1475	C-4
92049-1542	C-5
92049-1614	E-12
92051-005	C-4
92055-0016	C-8
92055-0046	B-3
92055-0064	C-6
92055-0104	F-8
92055-0106	F-8
92055-0113	C-5
92055-0165	E-14
92055-074	C-9
92055-0747	F-8
92055-0759	F-8
92055-091	B-14
92055-091	C-5
92055-1011	C-5
92055-1135	F-8
92055-1146	C-5
92055-1156	F-8
92055-1293	B-13
92055-1352	B-4
92055-1577	C-10
92055-1600	B-3
92055-1622	C-6

Part No.	Grid No.
92055-1671	C-6
92057-0180	B-9
92057-0192	E-12
92058-1074	E-12
92062-0017	C-4
92062-1081	C-4
92065-058	C-4
92066-0002	B-3
92066-0038	C-4
92066-0068	B-3
92066-0757	C-5
92066-0758	C-5
92066-0759	C-5
92070-0020	C-12
92070-0021	C-12
92072-0045	F-10
92072-0055	C-11
92072-1293	F-14
92072-1293	F-7
92075-209	C-14
92081-020	B-11
92093-1434	E-5
92093-1435	E-5
92093-1436	E-6
92093-1566	F-8
92104-0004	G-3
92104-1063	G-3
92104-1064	G-3
92110-0004	G-3
92110-0005	G-3
92116-1069	E-3
92116-1076	E-3
92122-0016	E-4
92122-0021	C-9
92122-0042	E-4
92143-1196	E-4
92143-1307	E-4
92143-1642	E-4
92143-1676	E-5
92144-1721	F-4
92144-1752	E-13
92144-1761	C-10
92144-1819	F-6
92145-0162	B-11
92145-0297	B-11
92145-0390	B-9
92145-0453	C-3
92145-0496	C-3
92145-0638-17D	E-14
92145-0680	C-3
92145-0716-17D	E-14
92145-0762-17D	E-14
92145-0819	E-7
92145-0820	E-7
92145-0862	B-12
92145-1414	B-14
92150-1340	F-6
92150-1340	F-8
92150-1435	C-14
92150-1435	E-4
92150-1435	G-7
92150-1451	F-3
92150-1452	F-3
92150-1506	B-6
92150-1650	B-9
92150-1691	F-4
92150-1692	F-6
92150-1802	F-9
92150-1811	F-6
92150-1935	B-3
92150-1978	E-12
92151-1449	B-7
92151-1799	F-4
92152-0028	E-11
92152-0052	E-4
92152-0150	B-13
92152-0275	B-6
92152-0292	E-5
92152-0425	E-6
92152-0540	B-13
92152-0666	C-14
92152-0824	F-9
92152-0845	E-11
92152-0944	E-4
92152-0945	E-4
92152-1139	E-6
92152-1346	F-10
92152-1414	C-3
92152-1419	C-3
92152-1427	E-12
92152-1449	E-4
92152-1544	E-12
92152-1552	F-10
92152-1624	E-4
92153-0020	F-9
92153-0338	B-3
92153-0339	B-3
92153-0406	B-3
92153-0530	B-14
92153-0620	E-5
92153-0623	B-6
92153-0717	B-9
92153-0773	F-7
92153-0807	F-7
92153-0808	F-7
92153-0938	E-6
92153-0939	E-6
92153-1001	B-3
92153-1021	F-5
92153-1380	B-9
92153-1419	F-3
92153-1419	F-5
92153-1669	C-3
92153-1669	C-4
92153-1779	B-4
92153-1876	B-12
92154-0024	E-3
92154-0031	C-11
92154-0038	C-4
92154-0038	C-8
92154-0243	C-6
92154-0380	E-4
92154-0381	E-4
92154-0394	E-6
92154-0396	B-7
92154-0511	E-5
92154-0512	E-6
92154-0513	E-6
92154-0515	E-7
92154-0516	E-13
92154-0519	B-7
92154-0520	B-9
92154-0520	C-3
92154-0520	F-10
92154-0522	E-4
92154-0523	E-4
92154-0524	E-4
92154-0526	C-4
92154-0527	C-4
92154-0528	C-4
92154-0529	C-4
92154-0530	C-13
92154-0530	C-5
92154-0531	C-13
92154-0545	E-7
92154-0546	D-3
92154-0546	F-13
92154-0547	F-11
92154-0772	E-8
92154-0774	E-4
92154-0898	B-11
92154-0899	C-7
92154-0913	E-4
92154-0915	D-3
92154-0972	E-8
92160-1116	B-7
92161-0041	C-6
92161-0073	F-13
92161-0213	B-6
92161-0266	E-4
92161-0842	C-8
92161-0929	F-7
92161-1172	E-14
92161-1184	E-10
92161-1377	F-10
92161-1392	F-10
92161-1393	F-10
92170-1077	D-4
92170-1286	D-4
92170-1938	C-5
92171-0372	D-4
92171-0481	F-3
92171-0482	F-3
92171-0652	F-12
92171-0820	F-9
92171-0857	B-3
92171-1843	C-11
92171-1990	B-6
92172-0064	C-6
92172-0069	F-7
92172-0119	E-5
92172-0438	C-6
92172-0776	C-6
92172-1064	F-5
92172-1088	B-11
92173-0861	F-14
92173-0885	B-7
92173-0975	B-3
92180-1058	B-8
92180-1059	B-8
92180-1194	B-8
92180-1195	B-8
92180-1196	B-8
92190-1488	E-13
92192-0161	F-10
92192-0167	C-14
92192-0823	C-6
92192-0944	C-5
92200-0045	B-12
92200-0075	B-11
92200-0114	B-3
92200-0154	E-13
92200-0171	C-4
92200-0245	B-12
92200-0271	C-14
92200-0285	E-5
92200-0390	B-13
92200-0532	F-9
92200-1389	B-13
92200-1548	B-12
92200-1623	E-12
92210-0065	E-11
92210-0066	E-3
92210-0167	F-7
92210-0285	E-5
92210-0337	F-9
92210-0490	B-10
92210-0493	E-12
92210-0494	E-14
92210-0495	E-14
92210-0630	E-5
92210-1080	E-4
92210-1080	E-6
92210-1184	E-4
92210-1184	E-6
92210-1352	E-8
92210-1411	E-12
99901-0031-03	G-8
99924-1448-03	G-8
99953-1069-03	G-8
99954-1082-03	G-8
99955-1058-03	G-8
99956-1045-03	G-8
99976-1718	G-8
99976-1719	G-8
99976-1807	G-8
99976-1808	G-8

Accessory G-7
Air Cleaner B-6
Brake Pedal E-13
Cables F-12
Camshaft(s) B-9
Chassis Electrical Equipment F-14
Clutch B-12
Crankcase C-4
Crankshaft B-10
Cylinder B-5
Cylinder Head B-3
Cylinder Head Cover B-4
Decals(FDF) G-5
Decals(FEF) G-6
Engine Cover(s) C-5
Engine Shrouds D-3
Fenders E-8
Footrests E-7
Frame E-3
Frame Fittings E-4
Front Brake F-4
Front Fork F-8/F-9
Front Hub E-11
Front Master Cylinder F-3
Fuel Injection C-8
Fuel Pump C-7
Fuel Tank F-10
Gear Change Drum B-14
Gear Change Mechanism C-3
Generator C-11
Handlebar F-7
Ignition System C-12
Kickstarter Mechanism B-11
Labels G-4
Manual(EU) G-8
Muffler(s) B-7
Oil Filter C-10
Oil Pump C-9
Owner's Tools G-3
Piston(s) B-5
Radiator C-14
Rear Brake F-6
Rear Hub E-12
Rear Master Cylinder F-5
Seat F-11
Shift Fork(s) B-14
Shock Absorber(s) E-14
Side Covers F-13
Stand(s) E-9
Suspension E-6
Swingarm E-5
Tensioner B-9
Throttle C-6
Tires E-10
Transmission B-13
Valve(s) B-8
Water Pipe D-4
Water Pump C-13

Accessory G-7
Air Cleaner B-6
Brake Pedal E-13
Cables F-12
Camshaft(s) B-9
Chassis Electrical Equipment F-14
Clutch B-12
Crankcase C-4
Crankshaft B-10
Cylinder B-5
Cylinder Head B-3
Cylinder Head Cover B-4
Decals(FDF) G-5
Decals(FEF) G-6
Engine Cover(s) C-5
Engine Shrouds D-3
Fenders E-8
Footrests E-7
Frame E-3
Frame Fittings E-4
Front Brake F-4
Front Fork F-8/F-9
Front Hub E-11
Front Master Cylinder F-3
Fuel Injection C-8
Fuel Pump C-7
Fuel Tank F-10
Gear Change Drum B-14
Gear Change Mechanism C-3
Generator C-11
Handlebar F-7
Ignition System C-12
Kickstarter Mechanism B-11
Labels G-4
Manual(EU) G-8
Muffler(s) B-7
Oil Filter C-10
Oil Pump C-9
Owner's Tools G-3
Piston(s) B-5
Radiator C-14
Rear Brake F-6
Rear Hub E-12
Rear Master Cylinder F-5
Seat F-11
Shift Fork(s) B-14
Shock Absorber(s) E-14
Side Covers F-13
Stand(s) E-9
Suspension E-6
Swingarm E-5
Tensioner B-9
Throttle C-6
Tires E-10
Transmission B-13
Valve(s) B-8
Water Pipe D-4
Water Pump C-13

Accessory G-7
Air Cleaner B-6
Brake Pedal E-13
Cables F-12
Camshaft(s) B-9
Chassis Electrical Equipment F-14
Clutch B-12
Crankcase C-4
Crankshaft B-10
Cylinder B-5
Cylinder Head B-3
Cylinder Head Cover B-4
Decals(FDF) G-5
Decals(FEF) G-6
Engine Cover(s) C-5
Engine Shrouds D-3
Fenders E-8
Footrests E-7
Frame E-3
Frame Fittings E-4
Front Brake F-4
Front Fork F-8/F-9
Front Hub E-11
Front Master Cylinder F-3
Fuel Injection C-8
Fuel Pump C-7
Fuel Tank F-10
Gear Change Drum B-14
Gear Change Mechanism C-3
Generator C-11
Handlebar F-7
Ignition System C-12
Kickstarter Mechanism B-11
Labels G-4
Manual(EU) G-8
Muffler(s) B-7
Oil Filter C-10
Oil Pump C-9
Owner's Tools G-3
Piston(s) B-5
Radiator C-14
Rear Brake F-6
Rear Hub E-12
Rear Master Cylinder F-5
Seat F-11
Shift Fork(s) B-14
Shock Absorber(s) E-14
Side Covers F-13
Stand(s) E-9
Suspension E-6
Swingarm E-5
Tensioner B-9
Throttle C-6
Tires E-10
Transmission B-13
Valve(s) B-8
Water Pipe D-4
Water Pump C-13

Accessory G-7
Air Cleaner B-6
Brake Pedal E-13
Cables F-12
Camshaft(s) B-9
Chassis Electrical Equipment F-14
Clutch B-12
Crankcase C-4
Crankshaft B-10
Cylinder B-5
Cylinder Head B-3
Cylinder Head Cover B-4
Decals(FDF) G-5
Decals(FEF) G-6
Engine Cover(s) C-5
Engine Shrouds D-3
Fenders E-8
Footrests E-7
Frame E-3
Frame Fittings E-4
Front Brake F-4
Front Fork F-8/F-9
Front Hub E-11
Front Master Cylinder F-3
Fuel Injection C-8
Fuel Pump C-7
Fuel Tank F-10
Gear Change Drum B-14
Gear Change Mechanism C-3
Generator C-11
Handlebar F-7
Ignition System C-12
Kickstarter Mechanism B-11
Labels G-4
Manual(EU) G-8
Muffler(s) B-7
Oil Filter C-10
Oil Pump C-9
Owner's Tools G-3
Piston(s) B-5
Radiator C-14
Rear Brake F-6
Rear Hub E-12
Rear Master Cylinder F-5
Seat F-11
Shift Fork(s) B-14
Shock Absorber(s) E-14
Side Covers F-13
Stand(s) E-9
Suspension E-6
Swingarm E-5
Tensioner B-9
Throttle C-6
Tires E-10
Transmission B-13
Valve(s) B-8
Water Pipe D-4
Water Pump C-13

Accessory G-7
Air Cleaner B-6
Brake Pedal E-13
Cables F-12
Camshaft(s) B-9
Chassis Electrical Equipment F-14
Clutch B-12
Crankcase C-4
Crankshaft B-10
Cylinder B-5
Cylinder Head B-3
Cylinder Head Cover B-4
Decals(FDF) G-5
Decals(FEF) G-6
Engine Cover(s) C-5
Engine Shrouds D-3
Fenders E-8
Footrests E-7
Frame E-3
Frame Fittings E-4
Front Brake F-4
Front Fork F-8/F-9
Front Hub E-11
Front Master Cylinder F-3
Fuel Injection C-8
Fuel Pump C-7
Fuel Tank F-10
Gear Change Drum B-14
Gear Change Mechanism C-3
Generator C-11
Handlebar F-7
Ignition System C-12
Kickstarter Mechanism B-11
Labels G-4
Manual(EU) G-8
Muffler(s) B-7
Oil Filter C-10
Oil Pump C-9
Owner's Tools G-3
Piston(s) B-5
Radiator C-14
Rear Brake F-6
Rear Hub E-12
Rear Master Cylinder F-5
Seat F-11
Shift Fork(s) B-14
Shock Absorber(s) E-14
Side Covers F-13
Stand(s) E-9
Suspension E-6
Swingarm E-5
Tensioner B-9
Throttle C-6
Tires E-10
Transmission B-13
Valve(s) B-8
Water Pipe D-4
Water Pump C-13

Accessory G-7
Air Cleaner B-6
Brake Pedal E-13
Cables F-12
Camshaft(s) B-9
Chassis Electrical Equipment F-14
Clutch B-12
Crankcase C-4
Crankshaft B-10
Cylinder B-5
Cylinder Head B-3
Cylinder Head Cover B-4
Decals(FDF) G-5
Decals(FEF) G-6
Engine Cover(s) C-5
Engine Shrouds D-3
Fenders E-8
Footrests E-7
Frame E-3
Frame Fittings E-4
Front Brake F-4
Front Fork F-8/F-9
Front Hub E-11
Front Master Cylinder F-3
Fuel Injection C-8
Fuel Pump C-7
Fuel Tank F-10
Gear Change Drum B-14
Gear Change Mechanism C-3
Generator C-11
Handlebar F-7
Ignition System C-12
Kickstarter Mechanism B-11
Labels G-4
Manual(EU) G-8
Muffler(s) B-7
Oil Filter C-10
Oil Pump C-9
Owner's Tools G-3
Piston(s) B-5
Radiator C-14
Rear Brake F-6
Rear Hub E-12
Rear Master Cylinder F-5
Seat F-11
Shift Fork(s) B-14
Shock Absorber(s) E-14
Side Covers F-13
Stand(s) E-9
Suspension E-6
Swingarm E-5
Tensioner B-9
Throttle C-6
Tires E-10
Transmission B-13
Valve(s) B-8
Water Pipe D-4
Water Pump C-13